THINK INNOVATION

SAMJUNG TECH

Absorption Chiller & Fan Coil Unit

SAMJUNG

SAMJUNG TECH

www.samjungtech.com

품질경쟁력 우수기업 선정서

Certificate of Excellent Quality Competitiveness Enterprise

Competitiveness and achievements

Challenging to the 21st century with the core technology

Samjung Tech has reinforced human resources, information infrastructures and technical development capacity since established. In addition, it has minimized the business crisis from economic cycles by saving the cost and expanding its market share through a high-quality service. It has successfully attained at shortening the delivery, improving quality of products from combining equipment manufacturing and construction, and spurred on the global strategy for expanding export.

Samjung Tech's competitiveness

Building up reliability with customers

Succeeding to manpower and the technology from Samsung Heavy Industries, we have maintained the good reputation as a reliable company.

Innovative technology

We acquired lots of intellectual properties by developing innovative technology and preoccupied the market prior to other competitors.

Synergy from combining manufacturing and construction

It has been a leading company shortening the time limit for delivery, improving quality of products, and saving the cost from combining equipment manufacturing and construction.

Outstanding human resources and organization

Most of the employees have job experience for a long time. We take absolutely advantageous position over accumulated technology, know-how, skillfulness, and organization.

Samjung Tech
A company with Samsung's reliable technology and people

Samjung Tech has been growing and developing into a leading company since it separated from Samsung group in January 2000. On the basis of its abundant experience and high technologies, Samjung Tech has expanded its businesses into the various fields such as refrigeration & air conditioning system, parking system, platform screen doors system, construction, and all kinds of facility construction works.

Samjung Tech comprises headquarters in Seoul, five nationwide branches located in metropolitans, and factories and research institutes established in Gimpo and Changwon, Korea. Through close collaboration of each part, Samjung Tech is willing to satisfy customers.

Also Samjung Tech provides its top-notch products for foreign customers through overseas agents network worldwide.

Refrigeration & air conditioning system of Samjung Tech

Close to customers at all time -
Samjung Tech is at the center of beautiful and convenient life.

Refrigeration & air conditioning system of Samjung Tech has lead a pure and pleasant green life-culture.

Samjung Tech has directly produced and supplied various equipments such as absorption chiller & heater, air handling unit, heat recovery ventilation system, cooling tower, fan coil unit, EHP, etc.

Especially, absorption chiller & heater has become the best items of the industry because we have supplied about 3,000 units to domestic and foreign countries until now through continuous R&D and stable after-sale service.

In addition, we were proudly approved our Quality Control System by being awarded the certificate for the quality competitiveness enterprise from MKE.

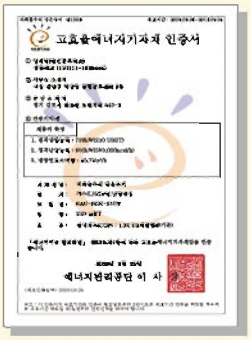

Hybrid solar energy absorption chiller

Samjung Tech has been approved of the research and development of a new & renewable energy technology from the government and has, as a major company, successfully completed a task of developing hybrid solar energy absorption chiller with 30RT level. Based on this, it has led many projects related to technical development in the solar energy field.

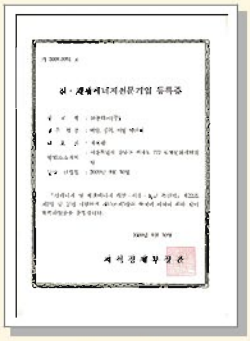

(Registration certificate for a new & renewable energy specialized company)

Absorption Chiller & Fan Coil Unit

SAMJUNG
SAMJUNG TECH

CONTENTS

01. High Efficiency Direct Fired Absorption Chiller & Heater ---------- 09
02. High Efficiency Steam Driven Absorption Chiller ---------- 21
03. Single Effect Hot Water Driven Absorption Chiller ---------- 35
04. Single Effect Double Lift Hot Water Driven Absorption Chiller ---- 45
05. Fan Coil Unit(F.C.U.) ---------- 53

Direct Fired Double Effect Absorption Chiller & Heater, T-Series

Based on accumulated technical know-how along with the technical cooperation with Hitachi in the past, Samjung has achieved high efficiency in operation, as well as excellent reliability and simplicity in maintenance by developing next generation Direct Fired Double Effect Absorption Chiller & Heater T-series, which are equipped with a highly functional PLC panel and high efficient energy saving technology. This high efficient and energy saving type produces heat source for heating and cooling with excellent capability at low costs. Samjung's absorption chiller and heater has been advanced to the new dimension of chiller and heater and it realizes energy saving as well as cost saving of total air-conditioning system.

Triple TOP Satisfaction

TOP
HIGH RELIABILITY
Attached high performance PLC panel for prevention of malfunction, protection of equipment and foretelling of disorder.

TOP
ENERGY SAVING
Save annual cooling cost to about 24% with new technology

TOP
SIMPLE OPERATION & MAINTENANCE
Operate chiller easily and reduce cost and time for maintenance with wide color touchscreen and various function

Major characteristics

The Top energy saving is realized with the newest technology and perfect performance test facilities

1. Applied optimum cycle design technology and two stage Evaporator and Absorber

2. Applied new developed High Efficiency special type tubes to improve the Heat Transfer effects

3. Adopted High Efficient SUS-Plate and welded type Solution Heat Exchanger of SWEP to compact and improve the Heat Transfer effects

4. Adopted High Efficient SUS-Plate and welded type Condensing Refrigerant Heat Exchanger of SWEP to use the Condensing Waste Heat of Refrigerant

5. Applied optimum combustion technology and Exhaust Gas Heat Exchanger to improve the Heat Transfer effects through the Waste Heat Recovery

6. Applied intelligent touch screen type PLC Panel (Please see page)

7. Save 24% Running Cost for cooling per year

8. World-best level compact size

I Reduced Installation Area I

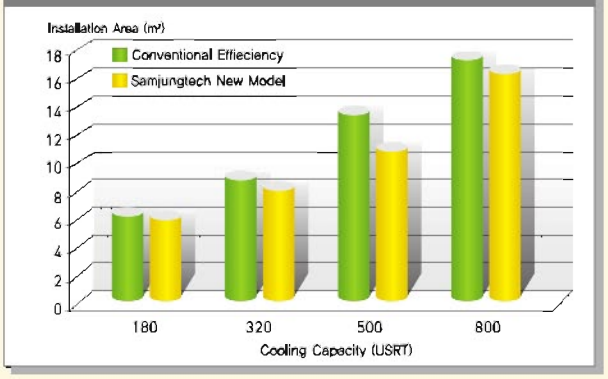

9. Qualified and acquired the Certificate of High Efficiency Chiller of all models by Government Office

10. Equipped the perfect Performance Test Facility in factory

I Saving for Running Cost I

I Reduced CO_2 Emission I

Above graph is based on followings.
1. Cooling capacity 500 usRT 2. 800 hours of cooling operation time per year 3. Korea gas tariff standard

Exquisite control

Highly efficient operation and energy saving is realized with delicate and perfect operating control

1. 10% Increase in Partial Load Characteristic Compared to the Average Load Rate of Existing Model by Control of Whole Solution Circulation Flow Rate

Optimal condition for solution circulation is maintained for the highly efficient operation.

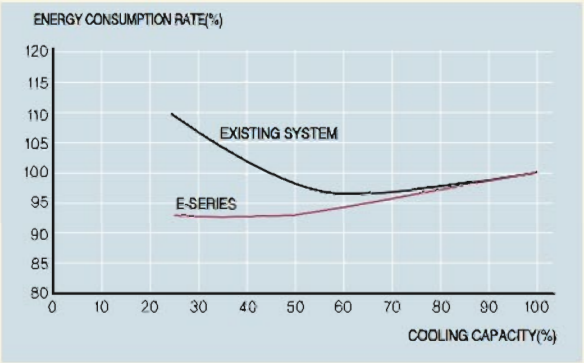

<Characteristic Comparison for Partial Load>

2. Energy Savings through Ideal Control of Dilution Operation Time

Stopping time has shortened compared to the conventional model through dilution operation time calculated by PLC. Also, the whole system's energy is saved by shortened operation time of pump and cooling tower during the dilution operation time.

3. Characteristics of the Partial Load

Samjung Absorption Chiller and Heater is advantageous in energy saving not only under normal condition but also under the partial load condition.

The figure below indicates the relationship between cooling capacity (%) and energy consumption (%) at the cooling water's inlet temperature of 32℃, 28℃, 24℃, respectively.

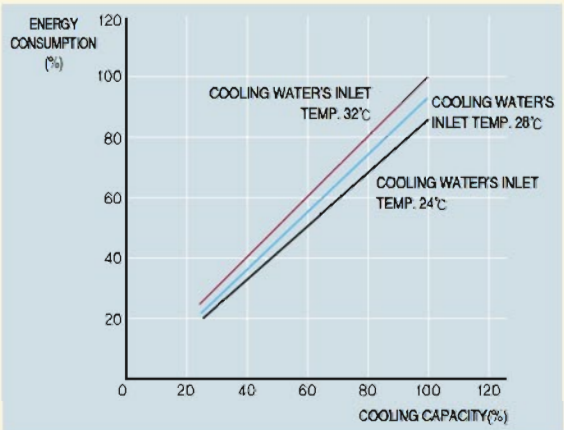

4. Characteristics of Starting and Stopping

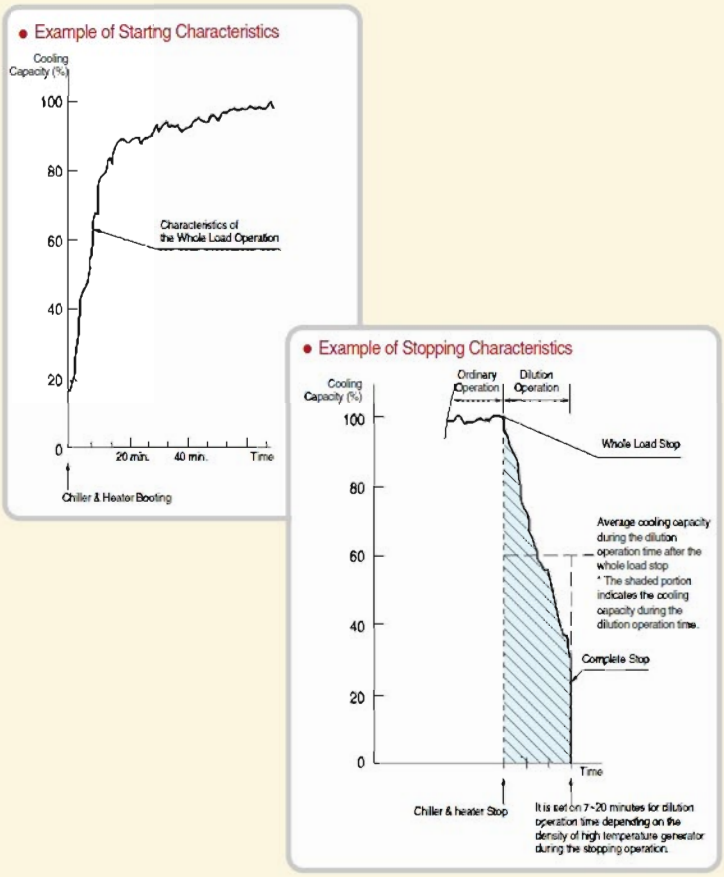

5. Caution for stopping the Chiller and Heater

The circulating solution's temperature must be low enough from crystalization, and from the point of stopping to the complete stop by reaching the non crystalization area is known as the dilution operation. During the dilution operation, it is necessary to load the chiller and heater in order to prevent the refrigerant freezing and solution crystalization. Therefore, in case both stop at the same time, it is necessary to configure an interlock operation circuit to have chiller & heater to stop before the air conditioning unit where the air conditioning unit stops even after the completion of dilution operation.

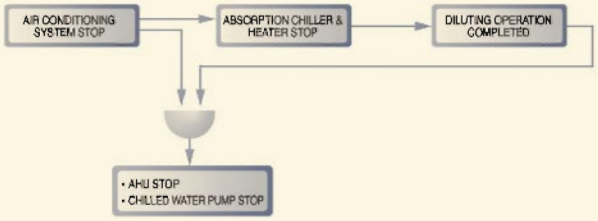

Wide touch screen & easy operation check

The high efficient touch screen type PLC panel make possible more energy saving, convenient and safety control of chiller

1. Energy saving and rapid control for the change of load is realized by the more accurate and advanced PID control.

2. Large and clear color touch screen and highest PLC controller

- Equip highest level 65,000 color, 10.4" wide color touch screen and the high reliable PLC of SIEMENS

3. Provide all of convenient and advanced functions for operating

- Easily see and check the operating status of important parts and the operating trend of important values in real time at [Status], [Cycle] and [Graph] screen
- Scheduling and remote operating / Operating history / Failure and alarm history / Setup function of the important target values etc.
- Save all data for 5 years and print the operating report with USB memory

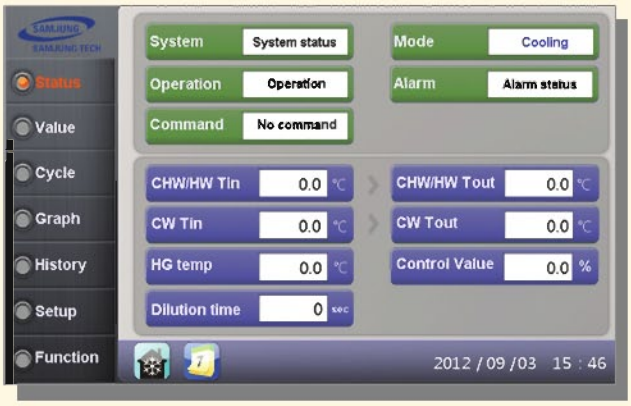

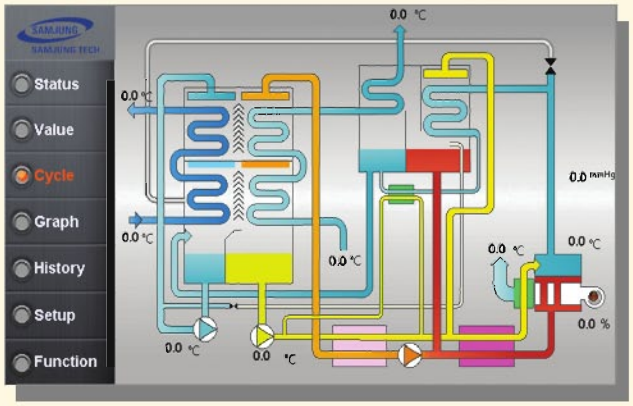

4. Advanced smart control panel

- Remote control interface system(Option)
- The operator can easily control and monitor the chiller by interface system with a remote PC or Smart Phone

5. Safety operation through the pre-alarm, preventive maintenance and protection of system

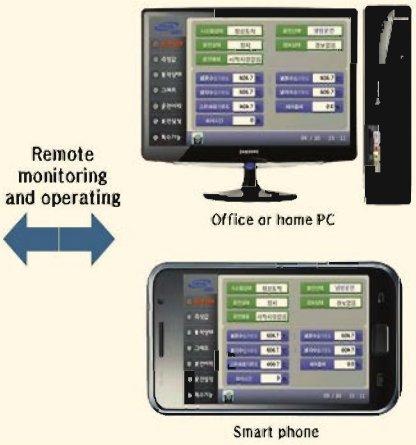

List of preventive protection and detection

- Preventive control of super cooled chilled water
- Limiting load control
- Frequency of purge
- Preventive control of over concentrated solution
- Abnormal temperature of the cooling water
- Pollution of cooling water tube
- Pollution of HTG tube
- Refrigerant over freezing prevention control

01

High Efficiency Direct Fired Absorption Chiller & Heater

10 Cooling/Heating Cycle
11 Automatic Sensing & Safety Apparatus
12 Specifications
15 Foundation
16 Control Panel & Wiring
17 Thermal Insulation
18 Chimney Size
19 Piping Plan
20 Supply Scope(Standard)

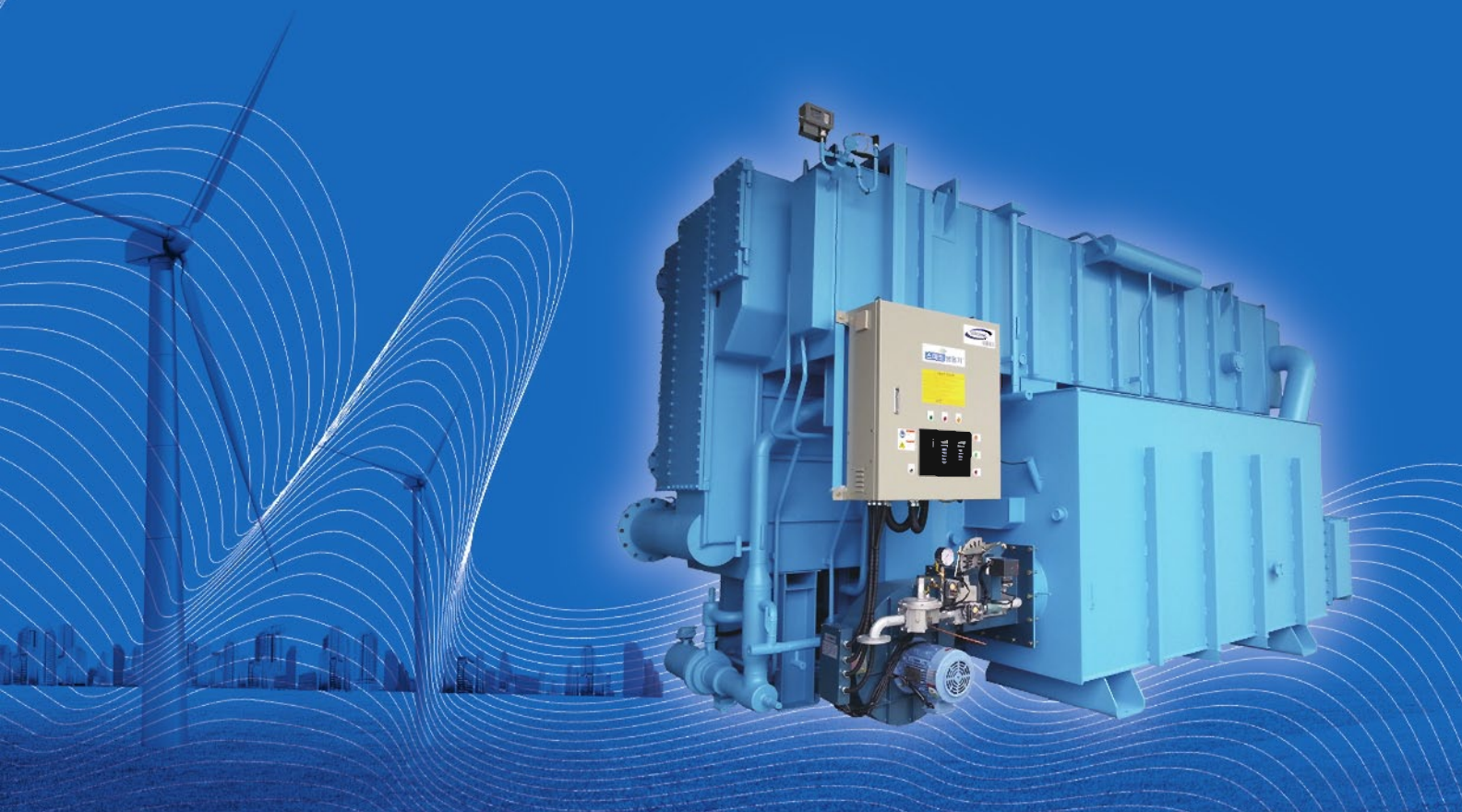

[Cooling/Heating Cycle]

1. Cooling Cycle

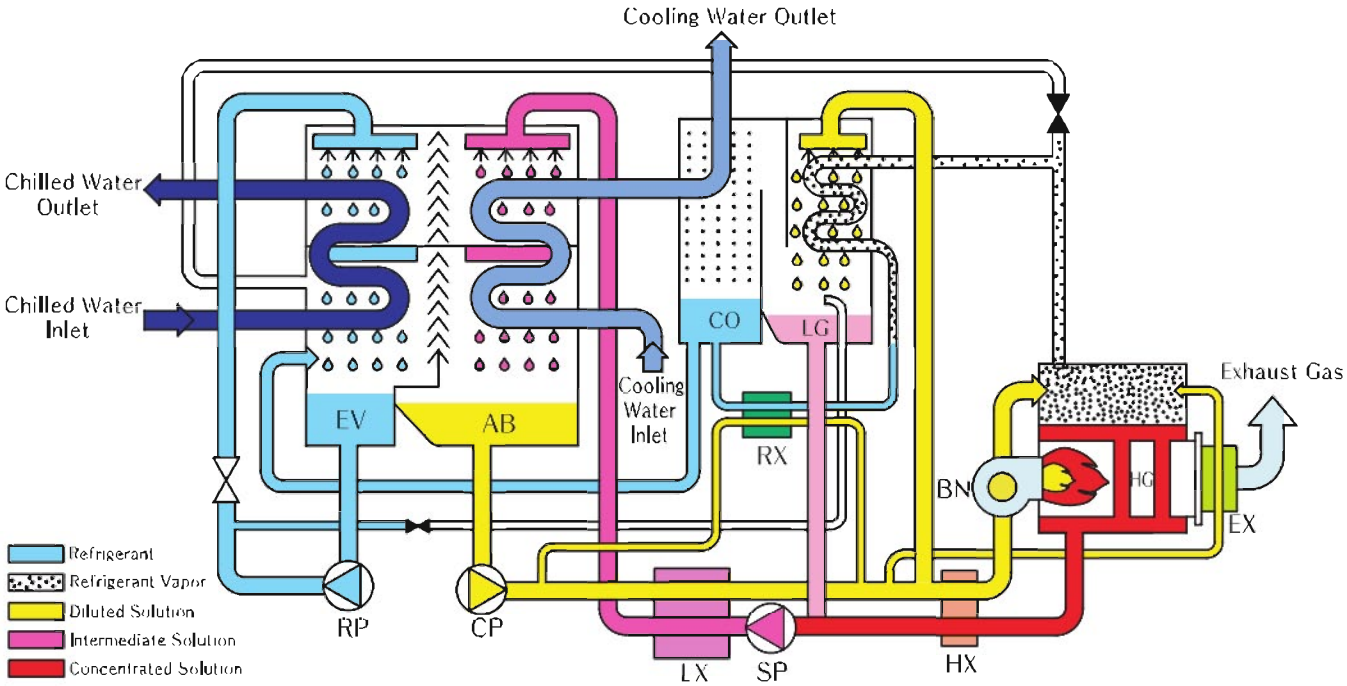

2. Heating Cycle

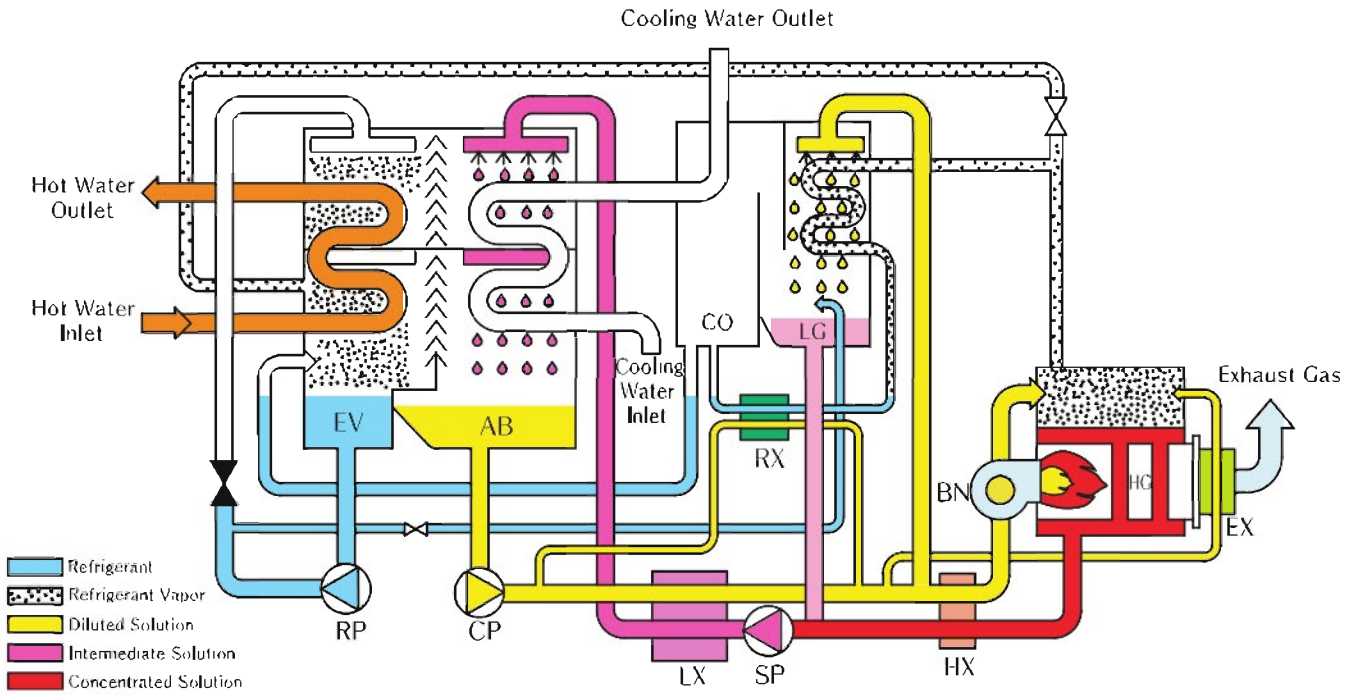

[Automatic Sensing & Safety Apparatus]

1. Installation Location

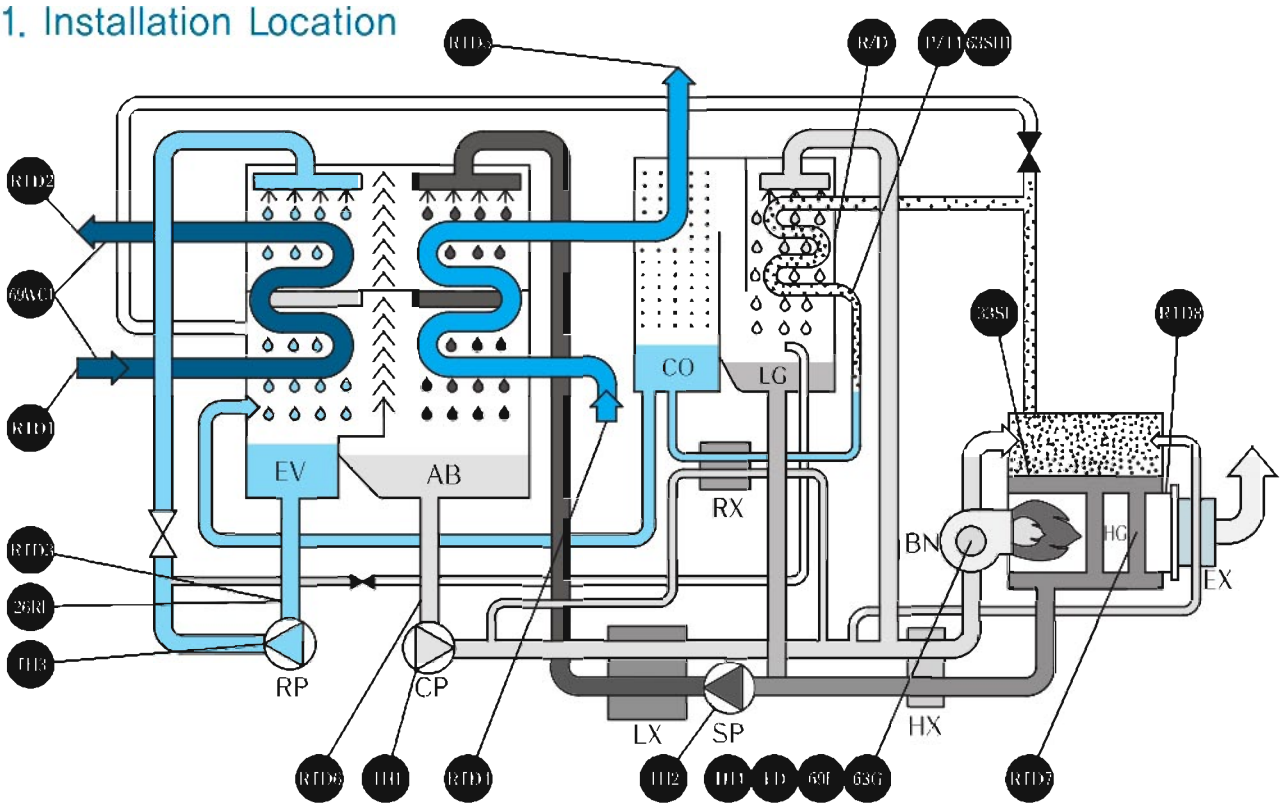

2. Explanation of Control & Protection Unit

Mark	Title	Function
RTD1	Temp Sensor for CHW/HW inlet	· detect each temperature, pressure · control target temperature of CHW/HW · ON-OFF control · control over-cooled of CHW & Ref. of EV · control limit of load · cut pressure of HG · monitor poor heat transfer of HG · monitor poor heat transfer of CW
RTD2	Temp Sensor for CHW/HW outlet	
RTD3	Temp Sensor for Ref. of EV	
RTD4	Temp Sensor for CW inlet	
RTD5	Temp Sensor for CW outlet	
RTD6	Temp Sensor for Sol. of AB	
RTD7	Temp Sensor for Sol. of HG	
RTD8	Temp Sensor for Exhaust Gas to EX	
P/T1	Pressure Sensor for Ref. Vapor of HG	
26RL	Temp Switch for Ref. of EV	prevent over-cooled of Ref. of EV and stop chiller
63SH1	Pressure Switch for Ref. Vapor of HG	prevent over-pressure of HG and stop chiller(with dilution)
33SL	Level Relay for Sol. of HG	monitor low level of Sol. of HG and stop chiller(with dilution)
69WC1	Cut-off Switch for CHW/HW	monitor flow of CHW/HW and stop chiller
TH1	Thermal Relay for CP	monitor over current of CP and stop chiller
TH2	Thermal Relay for SP	monitor over current of SP and stop chiller
TH3	Thermal Relay for RP	monitor over current of RP and stop chiller
TH4	Thermal Relay for BN	monitor over current of BN and stop chiller
FD	Flame Detector	detect flame extinction when igniting and block safety valves
69F	Air Pressure Switch for BN	detect air pressure error of BN fan and stop combustion
63G	Gas Pressure Switch for BN	detect gas pressure error and stop combustion
R/D	Rupture Disk	burst a round thin plate when reach at a set pressure and protect chiller body from a serious damage

[Specifications]

ITEM(UNIT) \ SACH-G/K/D				50T	60T	70T	80T	100T	120T	140T	150T	180T
REFRIGERATION CAPACITY			USRT	50	60	70	80	100	120	140	150	180
			kW	176	211	246	281	352	422	492	527	633
HEATING CAPACITY			kcal/h	111,900	134,300	156,700	179,100	223,800	268,600	313,300	335,700	402,800
			kW	130	156	182	208	260	312	364	390	468
CHILLED/ HOT WATER	TEMP.	CHILLED WATER	℃	12 ℃ → 7 ℃								
		HOT WATER		56.3 ℃ → 60 ℃								
	FLOW RATE		m^3/h	30.2	36.3	42.3	48.4	60.5	72.6	84.7	90.7	108.9
	PRESSURE DROP		mAq	4.4	5.1	4.4	4.7	4.4	5.0	5.5	5.4	6.3
	PIPE CONNECTION SIZE		A	65		80		100				125
	NO. of PASS		EA	EVEN								ODD
COOLING WATER	TEMP.		℃	32 ℃ → 37 ℃								
	FLOW RATE		m^3/h	50.4	60.5	70.5	80.6	100.8	120.9	141.1	151.2	181.4
	PRESSURE DROP		mAq	6.2	7.0	6.5	6.7	6.8	7.3	7.6	7.2	8.8
	PIPE CONNECTION SIZE		A	80		100		125				150
	NO. of PASS		EA	EVEN								ODD
ELECTRIC POWER	POWER SUPPLY		-	3Ø 380V 50Hz								
	GAS	ELECTRIC CAPACITY	KVA	8.4				9.8				11.4
	SOLUTION PUMP		kW/(A)	1.1(4.0)+1.2(4.0)				1.5(5.5)+1.2(4.0)				2.0(6.5)+1.5(5.5)
	REFRIGERANT PUMP			0.2(1.1)				0.3(1.6)				
	VACUUM PUMP			0.75(2.0)								
	BURNER FAN(GAS)		kW/(A)	0.75(1.7)								
FUEL CONSU-MPTION	LNG	COOLING	Nm^3/h	11.0	13.2	15.4	17.6	22.0	26.4	30.8	33.0	39.7
		HEATING		12.3	14.8	17.2	19.7	24.6	29.5	34.5	36.9	44.3
		PIPE CONNECTION SIZE	A	25				40				
		GAS PRESSURE	mmAq	200								
DIMENSIO-NS	LENGTH(L)		mm	2,634		2,892		3,039		3,157		3,505
	WIDTH(W)		mm	1,707		1,755		1,800		1,949		1,949
	HEIGHT(H)		mm	2,091		2,126		2,504				
WEIGHT	SHIPPING WEIGHT		ton	3.5	3.6	4.2	4.2	5.0	5.1	5.5	5.5	6.3
	OPERATION WEIGHT		ton	4.4	4.5	5.2	5.3	6.6	6.6	7.2	7.3	8.5
WATER QUANTITY	CHILLED WATER		ℓ	114	122	143	153	216	230	258	272	340
	COOLING WATER			155	166	195	210	312	333	384	406	488
EXHAUST GAS DUCT SIZE			mm	520x468				600x518				600x517
EXCHANGE SPACE OF TUBE			mm	1,850		2,450		2,550				3,220

1. 1USRT = 3024kcal/h(3.516kW)
2. Fouling factor of chilled water, cooling water, hot water : 0.0001 $m^2h℃/kcal$(0.000086m^2K/W)
3. The maximum working pressure for chilled water, cooling water, hot water : 10 kg/cm^2G(0.98MPaG)
4. The capacity control range for standard specification.(capacity, chilled water, cooling water) : 100 ~ 25%(Gas proportional control)
5. The standard of fuel consumption - GAS(LNG) : High Heating Value 10,400kcal/Nm^3(43.5MJ/Nm^3)
6. Pipe connection size of gas can be changed according to the gas pressure of site.
7. The power supply can be applied 3Ø 220V/380V/440V 50Hz also.
8. These specification can be changed without notice for technical improvements.

[Specifications]

ITEM(UNIT) \ SACH-G/K/D			210T	240T	280T	320T	360T	400T	450T	500T	560T	630T
REFRIGERATION CAPACITY		USRT	210	240	280	320	360	400	450	500	560	630
		kW	738	844	985	1125	1266	1407	1582	1758	1969	2215
HEATING CAPACITY		kcal/h	470,000	537,100	626,600	716,100	805,600	895,200	1,007,000	1,118,900	1,253,200	1,409,800
		kW	547	625	729	833	937	1041	1171	1301	1457	1639
CHILLED/ HOT WATER	TEMP. CHILLED WATER	℃	12 ℃ → 7 ℃									
	TEMP. HOT WATER	℃	56.3 ℃ → 60 ℃									
	FLOW RATE	m^3/h	127.0	145.2	169.3	193.5	217.7	241.9	272.2	302.4	338.7	381.0
	PRESSURE DROP	mAq	5.3	5.8	4.8	5.3	4.4	4.7	5.3	5.7	7.9	7.9
	PIPE CONNECTION SIZE	A	125		150				200			
	NO. of PASS	EA	EVEN		ODD							
COOLING WATER	TEMP.	℃	32 ℃ → 37 ℃									
	FLOW RATE	m^3/h	211.6	241.9	282.2	322.5	362.8	403.1	453.5	503.9	564.3	634.9
	PRESSURE DROP	mAq	7.0	7.5	6.5	6.9	6.6	6.6	7.2	7.5	9.5	9.2
	PIPE CONNECTION SIZE	A	150		200				250		300	
	NO. of PASS	EA	EVEN		ODD							
ELECTRIC POWER	POWER SUPPLY	-	3Ø 380V 50Hz									
	GAS ELECTRIC CAPACITY	KVA	13.3		14.7		16.4		22.8		25.1	
	SOLUTION PUMP	kW/(A)	2.4(7.5)+1.5(5.5)		2.4(7.5)+2.0(6.5)		3.4(10.0)+2.0(6.5)		3.7(13.0)+2.2(7.0)			
	REFRIGERANT PUMP	kW/(A)	0.3(1.6)		0.4(1.6)				1.5(4.5)			
	VACUUM PUMP	kW/(A)	0.75(2.0)									
	BURNER FAN(GAS)	kW/(A)	1.5(3.6)		2.2(4.7)				3.7(8.1)		5.5(11.6)	
FUEL CONSU-MPTION	LNG COOLING	Nm^3/h	46.3	52.9	61.7	70.5	79.3	88.1	99.1	110.2	123.4	138.8
	LNG HEATING	Nm^3/h	51.7	59.1	68.9	78.8	88.6	98.5	110.8	123.1	137.9	155.1
	LNG PIPE CONNECTION SIZE	A	50		40						50	
	LNG GAS PRESSURE	mmAq	200		4,000							
DIMENSIO-NS	LENGTH(L)	mm	3,930		4,588		4,696		5,071		5,783	
	WIDTH(W)	mm	1,949		1,955		2,159		2,369		2,482	
	HEIGHT(H)	mm	2,504		2,516		2,960					
WEIGHT	SHIPPING WEIGHT	ton	7.3	7.3	8.4	8.6	10.4	10.5	12.0	12.1	14.2	14.6
	OPERATION WEIGHT	ton	9.9	10.0	11.7	11.8	14.3	14.6	16.9	17.2	20.5	21.1
WATER QUANTITY	CHILLED WATER	ℓ	392	414	456	483	603	634	768	801	922	1,001
	COOLING WATER	ℓ	559	594	646	690	837	888	1,079	1,133	1,405	1,532
EXHAUST GAS DUCT SIZE		mm	600x517				704x617		818x717			
EXCHANGE SPACE OF TUBE		mm	3,870		4,670		4,600		4,800		5,500	

1. 1USRT = 3024kcal/h(3.516kW)
2. Fouling factor of chilled water, cooling water, hot water : 0.0001 $m^2h℃/kcal$(0.000086m^2K/W)
3. The maximum working pressure for chilled water, cooling water, hot water : 10 kg/cm^2G(0.98MPaG)
4. The capacity control range for standard specification.(capacity, chilled water, cooling water) : 100 ~ 25%(Gas proportional control)
5. The standard of fuel consumption – GAS(LNG) : High Heating Value 10,400kcal/Nm^3(43.5MJ/Nm^3)
6. Pipe connection size of gas can be changed according to the gas pressure of site.
7. The power supply can be applied 3Ø 220V/380V/440V 50Hz also.
8. These specification can be changed without notice for technical improvements.

[Specifications]

ITEM(UNIT) \ SACH-G/K/D				700T	800T	900T	1000T	1100T	1250T	1350T	1500T
REFRIGERATION CAPACITY			USRT	700	800	900	1000	1100	1250	1350	1500
			kW	2461	2813	3165	3516	3868	4395	4747	5274
HEATING CAPACITY			kcal/h	1,566,500	1,790,300	2,014,000	2,237,800	2,461,600	2,797,200	3,021,000	3,356,700
			kW	1822	2082	2342	2602	2862	3253	3513	3903
CHILLED/ HOT WATER	TEMP.	CHILLED WATER	℃	12 ℃ → 7 ℃							
		HOT WATER		56.3 ℃ → 60 ℃							
	FLOW RATE		m^3/h	423.4	483.8	544.3	604.8	665.3	756.0	816.5	907.2
	PRESSURE DROP		mAq	10.6	8.0	11.0	14.2	3.4	4.6	4.1	5.3
	PIPE CONNECTION SIZE		A	200	250			300		350	
	NO. of PASS		EA	ODD				EVEN			
COOLING WATER	TEMP.		℃	32 ℃ → 37 ℃							
	FLOW RATE		m^3/h	705.4	806.2	907	1007.7	1108.5	1259.6	1360.4	1511.6
	PRESSURE DROP		mAq	12.3	9.1	12.3	15.9	9.4	12.5	11.3	14.5
	PIPE CONNECTION SIZE		A	300	350			400			
	NO. of PASS		EA	ODD							
ELECTRIC POWER	POWER SUPPLY		-	3Ø 380V 50Hz							
	GAS	ELECTRIC CAPACITY	KVA	27.0	29.8	35.1	36.4	45.5		47.8	
	SOLUTION PUMP		kW/(A)	4.5(16.0)+2.2(7.0)		5.5(20.0)+3.0(11.0)		7.5(25.0)+3.7(13.0)		7.5(25.0)+4.5(16.0)	
	REFRIGERANT PUMP			1.5(4.5)			1.8(6.5)			2.2(7.0)	
	VACUUM PUMP			0.75(2.0)							
	BURNER FAN(GAS)		kW/(A)	5.5(11.6)	7.5(15.8)			11(22.6)			
FUEL CONSU-MPTION	LNG	COOLING	Nm^3/h	154.2	176.2	198.3	220.3	242.3	275.4	297.4	330.5
		HEATING		172.3	196.9	221.5	246.2	270.8	307.7	332.3	369.2
		PIPE CONNECTION SIZE	A	50	65						
		GAS PRESSURE	mmAq	4,000							
DIMENSIO-NS	LENGTH(L)		mm	6,444	5,998	6,535	7,035	6,655	7,155	7,200	7,700
	WIDTH(W)		mm	2,482	2,756			3,045		3,341	
	HEIGHT(H)		mm	2,960	3,174			3,508		3,550	
WEIGHT	SHIPPING WEIGHT		ton	16.0	18.4	20.0	21.6	25.3	27.3	28.9	31.2
	OPERATION WEIGHT		ton	23.3	26.9	29.5	31.8	36.9	39.8	42.4	46.0
WATER QUANTITY	CHILLED WATER		ℓ	1,105	1,326	1,457	1,550	1,826	1,945	2,358	2,495
	COOLING WATER			1,680	2,050	2,240	2,376	3,160	3,348	3,904	4,122
EXHAUST GAS DUCT SIZE			mm	818x717	970x819			1120x973			
EXCHANGE SPACE OF TUBE			mm	6,200	5,550	6,250	6,750	6,350	6,850	6,950	7,450

1. 1USRT = 3024kcal/h(3.516kW)
2. Fouling factor of chilled water, cooling water, hot water : 0.0001 $m^2h℃/kcal$(0.000086m^2K/W)
3. The maximum working pressure for chilled water, cooling water, hot water : 10 kg/cm^2G(0.98MPaG)
4. The capacity control range for standard specification.(capacity, chilled water, cooling water) : 100 ~ 25%(Gas proportional control)
5. The standard of fuel consumption – GAS(LNG) : High Heating Value 10,400kcal/Nm^3(43.5MJ/Nm^3)
6. Pipe connection size of gas can be changed according to the gas pressure of site.
7. The power supply can be applied 3Ø 220V/380V/440V 50Hz also.
8. These specification can be changed without notice for technical improvements.

[Foundation]

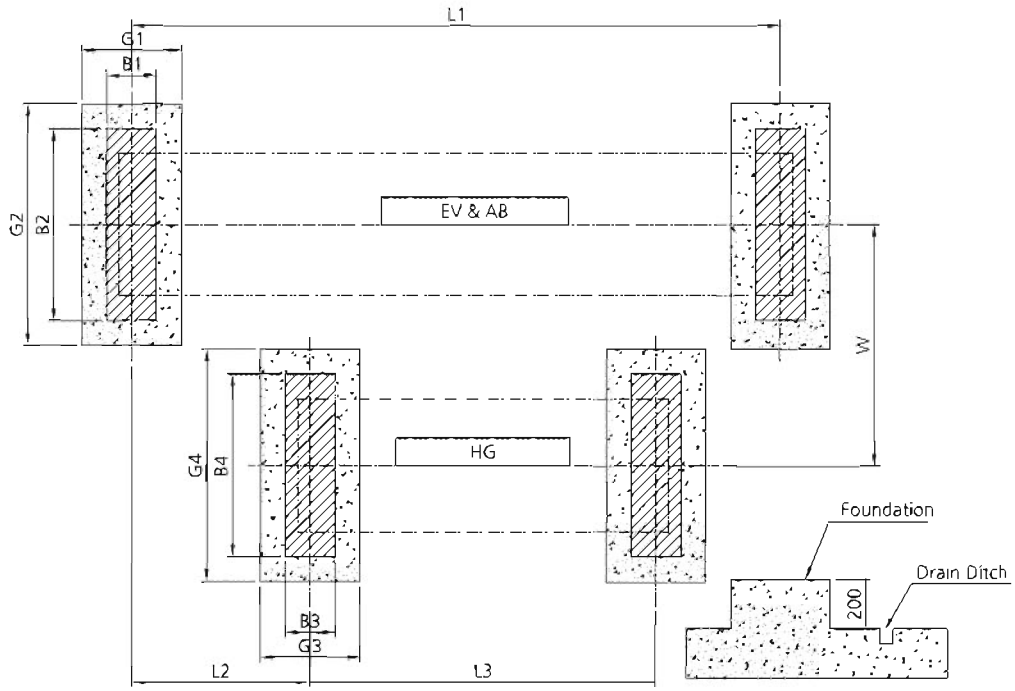

(unit : mm)

Model	G1	G2	G3	G4	B1	B2	B3	B4	L1	L2	L3	W
50T	300	861	350	856	100	661	150	656	1460	630	700	605
60T												
70T	400	852	400		200	652	200		1500	410	958	410
80T												
100T		892		906		692		706		474	1026	474
120T												
140T		972		912		772		712				
150T												
180T				920				720	1810	534	1076	961
210T				936				736	2460	768	1692	769
240T												
280T									3260	1057	1903	969
320T												
360T	450	1037	450	1060	250	837	250	860	3402	1067	2245	1067
400T												
450T		1117		1196		917		996	3602	1287	2195	1190
500T												
560T		1197				997			4302	1317	2761	1263.5
630T												
700T									5002	1819	2959	
800T	550	1317	550	1352	350	1117	350	1152	4200	1400	2700	1425
900T									4900		3000	1441.5
1000T									5400		3400	
1100T		1391		1540		1191		1340	4900	1492	3326	1549.5
1250T									5400		3426	
1350T		1527				1327					3684	1684.5
1500T									5500	1376	3742	

NOTE

1. Smooth the concrete foundation surface and the horizontal level must become below 1/500.
2. The horizontal level of chiller installed must become below 1/1000.
3. (▨) symbol indicates [BASE LEG] of chiller.
4. Make a drainage ditch around the chiller.

[Control Panel]

Outline

No	Description
1	Buzzer
2	Air filter
3	Purge start/stop switch
4	Run state lamp
5	Stop state lamp
6	Alarm state lamp
7	Touch screen
8	Reset switch
9	Start switch
10	Stop switch
11	Cooling fan

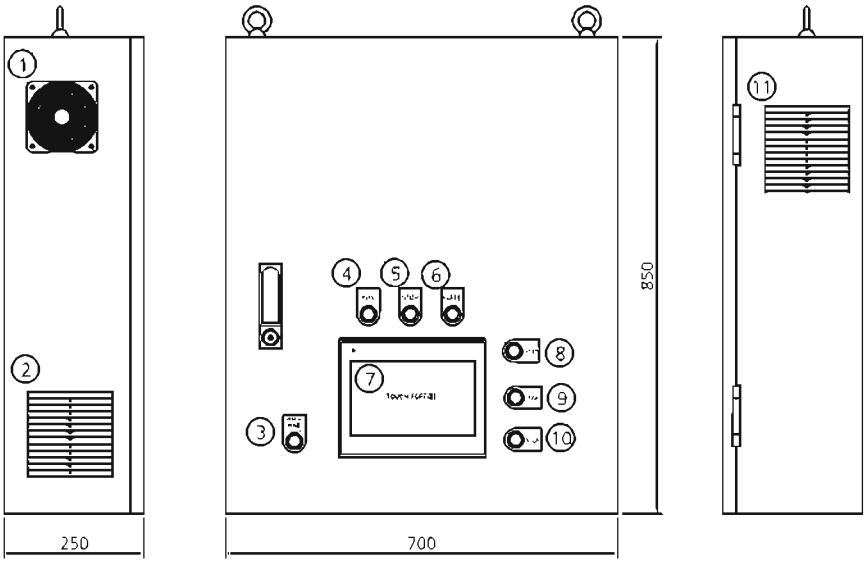

Power line

SYMBOL	Description
ELB-M	Main Circuit Breaker
KM-CP	Solution Circulation Pump M/C
KM-SP	Solution Spray Pump M/C
KM-RP	Refrigerant Pump M/C
KM-AP	Purge Pump M/C
KM-BF	Burner Fan M/C
Th-CP	Solution Circulation Pump OCR
Th-SP	Solution Spray Pump OCR
Th-RP	Refrigerant Pump OCR
Th-AP	Purge Pump OCR
Th-BF	Burner Fan OCR
CP-C	Control circuit protect
TR	Transformer

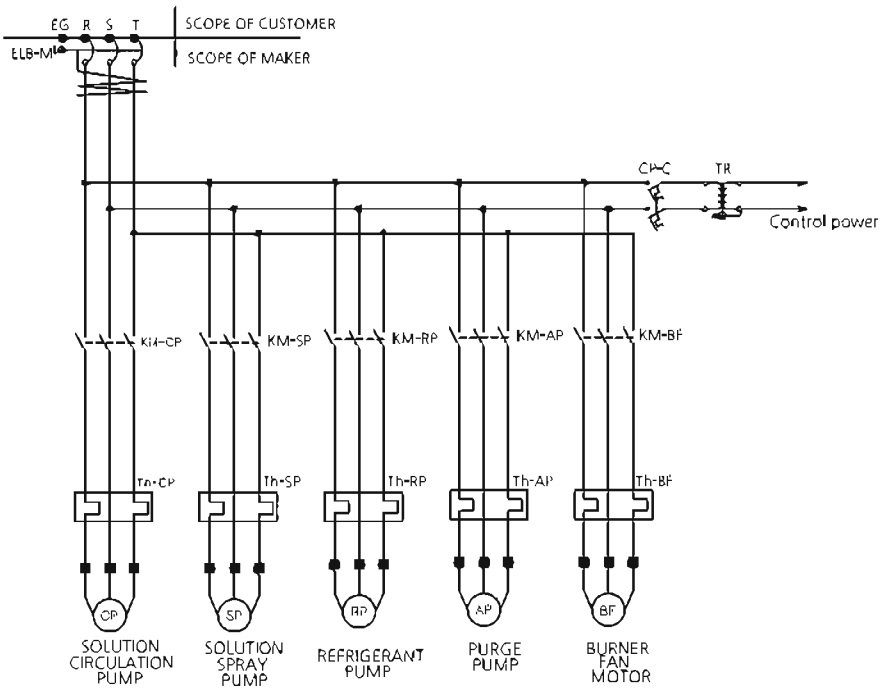

Wiring

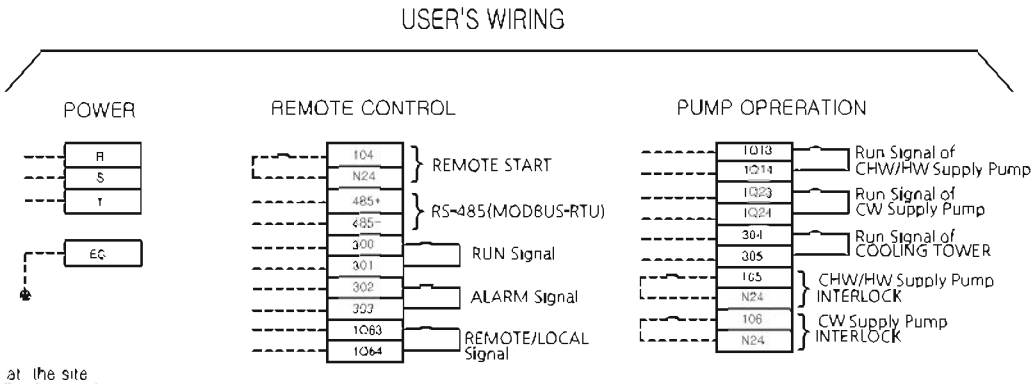

Note

---- Is field wiring at the site after completion of chiller installation

[Thermal Insulation]

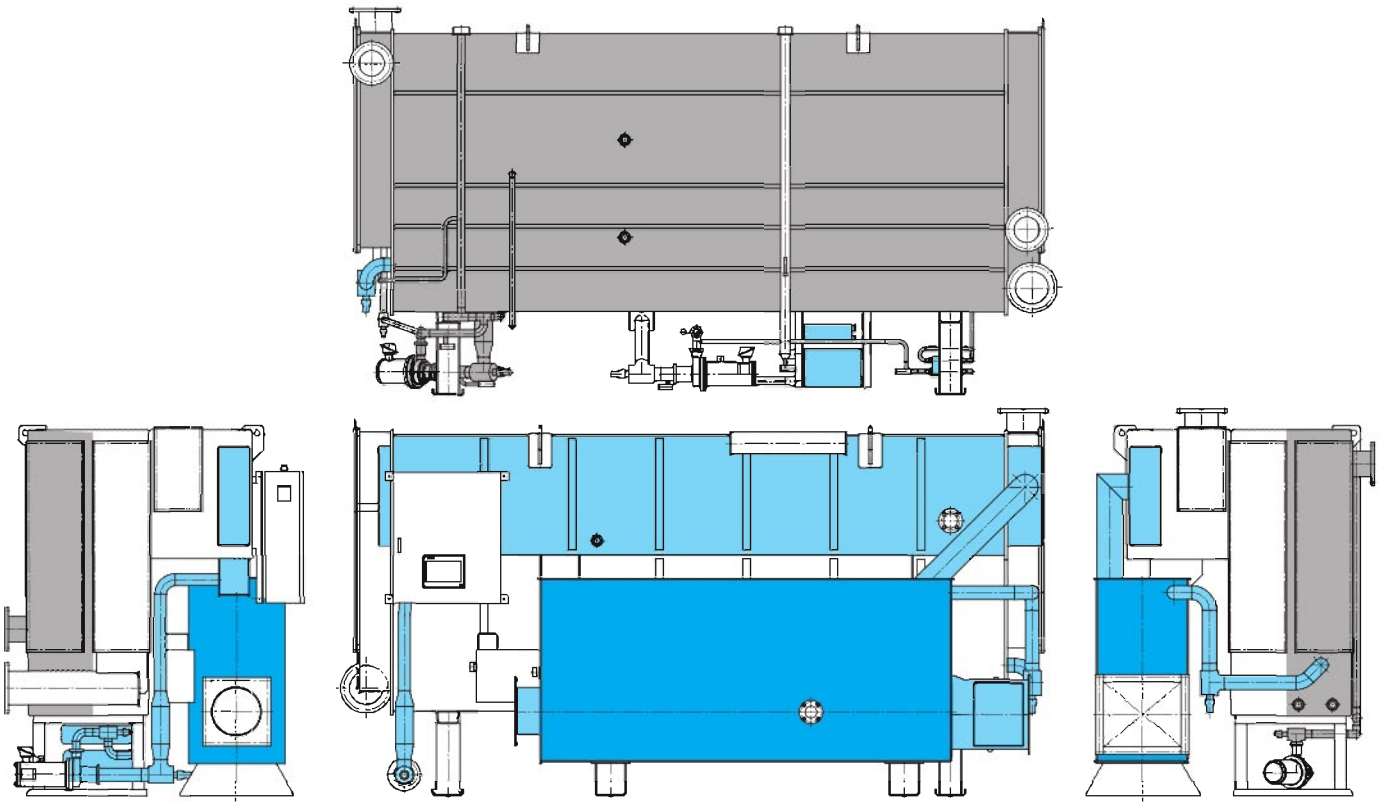

	Mark	Material	Thickness	Finishing Material	Note
Hot Surface		Glass Wool	50mm	Galvanized Plate 0.6t	-
		Glass Wool	100mm	Galvanized Plate 0.6t	HG Outside
Cold Surface		Polyethylene	20mm	-	-

※ Color : SKY BLUE(7.5B 5.1/2.0)

■ Cold Surface and Hot Surface

SACH-G/K/D	50T,60T	70T,80T	100T,120T	140T,150T	180T	210T,240T	280T,320T	360T,400T	450T,500T
Cold Surface(㎡)	5	6	7	8	10	12	14	16	18
Hot Surface(㎡)	9	10	12	13	14	16	17	21	24
SACH-G/K/D	560T,630T	700T	800T	900T	1000T	1100T	1250T	1350T	1500T
Cold Surface(㎡)	20	22	23	25	26	27	28	30	33
Hot Surface(㎡)	28	29	33	35	38	41	43	45	49

NOTE

1. Use only noncombustible material.
2. Valve control part, sight glass, thermometer gauge, thermowell, pressure gauge and pump motors are not insulated.
3. For insulation area for each model, please refer to the picture below.
4. Part that requires a insulation, please refer to the picture above.
5. The water box sections should be worked to be disassembled for the repair.
6. Please install an insulating materials by using adhesive, mending and etc.
7. Total insulation area includes piping.

[Chimney Size]

Model	Heating GasCon. rate(Nm³/h)	Cross-Section Area(m2)			Square Duct(mm x mm)			Round Duct(mm)		
		4m/s	5m/s	6m/s	4m/s	5m/s	6m/s	4m/s	5m/s	6m/s
50T	12.3	0.019	0.015	0.012	136	122	111	154	138	126
60T	14.8	0.022	0.018	0.015	149	134	122	169	151	138
70T	17.2	0.026	0.021	0.017	161	144	132	182	163	148
80T	19.7	0.030	0.024	0.020	172	154	141	195	174	159
100T	24.6	0.037	0.030	0.025	193	172	157	217	195	178
120T	29.5	0.045	0.036	0.030	211	189	172	238	213	194
140T	34.5	0.052	0.042	0.035	228	204	186	258	230	210
150T	36.9	0.056	0.045	0.037	236	211	193	266	238	217
180T	44.3	0.067	0.054	0.045	259	231	211	292	261	238
210T	51.7	0.078	0.062	0.052	279	250	228	315	282	257
240T	59.1	0.089	0.071	0.059	299	267	244	337	301	275
280T	68.9	0.104	0.083	0.069	323	288	263	364	326	297
320T	78.8	0.119	0.095	0.079	345	309	282	389	348	318
360T	88.6	0.134	0.107	0.089	366	327	299	413	369	337
400T	98.5	0.149	0.119	0.099	386	345	315	435	389	355
450T	110.8	0.167	0.134	0.112	409	366	334	462	413	377
500T	123.1	0.186	0.149	0.124	431	386	352	486	435	397
560T	137.9	0.208	0.167	0.139	456	408	373	515	461	420
630T	155.1	0.234	0.187	0.156	484	433	395	546	488	446
700T	172.3	0.260	0.208	0.173	510	456	416	576	515	470
800T	196.9	0.297	0.238	0.198	545	488	445	615	550	502
900T	221.5	0.334	0.268	0.223	578	517	472	653	584	533
1000T	246.2	0.372	0.297	0.248	610	545	498	688	615	562
1100T	270.8	0.409	0.327	0.273	639	572	522	722	645	589
1250T	307.7	0.465	0.372	0.310	682	610	557	769	688	628
1350T	332.3	0.502	0.401	0.335	708	634	578	799	715	653
1500T	369.2	0.557	0.446	0.372	747	668	610	843	754	688

NOTE

1. Above table apply to [standard T-TYPE] high efficiency direct fired absorption chiller & heater.
2. The standard of gas consumption – LNG : High Heating Value 10,400kcal/Nm³(43.5MJ/Nm³)
3. Recommended velocity for exhaust gas in chimney : 4m/s ~ 6m/s
4. Above data is counted by following preconditions.
   - duct length 50m
   - excess air factor 1.2
   - average temperature of duct 157.5℃
5. Therefore constructor must count exact chimney size again according to on-site conditions.

[Piping Plan]

1. Piping Work

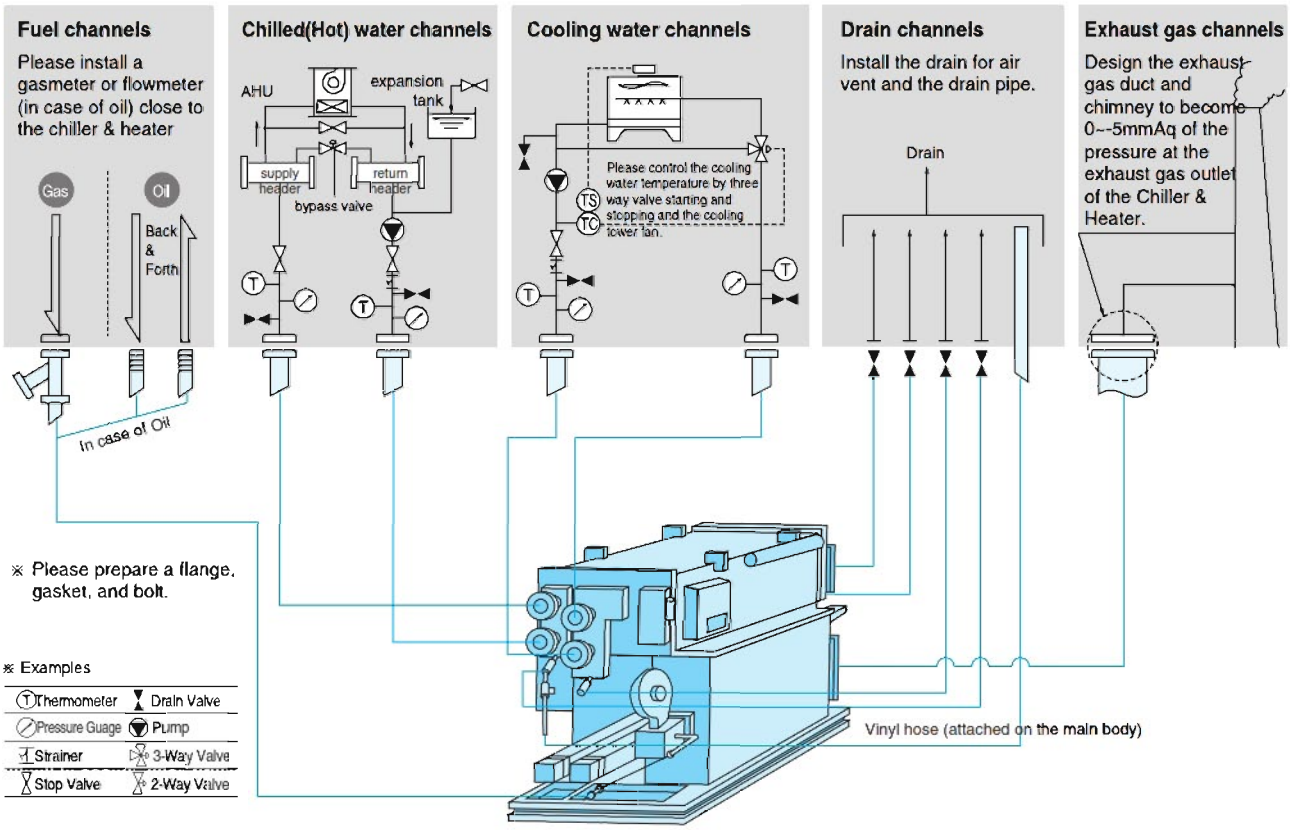

2. Attention for the execution of piping work for chilled(hot) water and cooling water

❶ Water piping should be installed as shown in the picture.

❷ Please refer to approval drawing of our company for the directions for water inlet/outlet. It may vary depending on the capacity size.

❸ Make sure chiller & heater does not get the pressure over 10kg/cm²G (Please consult our company in case the pressure is over 10kg/cm²G).

❹ Please install the drain valve at the lowest point between the valve and chiller & heater.

❺ Please install the air vent valve higher than the chiller & heater.

❻ Please install the thermometer and pressure gauge as shown in the picture.

❼ Please install the expansion tank as shown in the picture in case of chilled(hot) water channels do not open.

❽ Please install the cooling tower where the exhaust gas from the chimney does not reach. Otherwise it may cause the corrosion by having the contaminated materials from the exhaust gas to the cooling water.

❾ Please install 20MESH strainer. Too much contaminated materials in the chilled water channel may cause the freezing of chilled water in the tube and blockage of cooling water channel may cause too much pressure during operation and corrode the tube.

❿ Please secure water supply source for cleaning the tube.

3. Power Supply for Chiller & Heater

Power supply for the chiller & Heater is designed for three phase/three wire as the standard. Please refer to the picture for the supplying method.

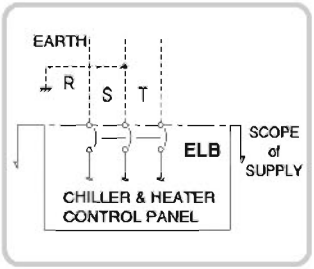

• In case of three phase/three wire, S wire should be earthed.

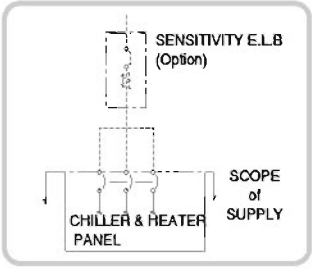

• In case of power supply of three phase/four wire, and S wire cannot be earthed, please install high sensitivity Earth Leakage Breaker operating under 50mA in order to prevent malfunction of combustion apparatus.

[Supply Scope(Standard)]

Division	Description	Scope
Chiller Assembly	1) 2-stage Evaporator, 2-stage Absorber, Condenser, Low temp. Generator, High temp. Generator	Vendor
	2) Low/high temp. Sol. Heat Exchanger, Condensated Ref. Heat Exchanger, Exhaust Gas Heat Exchanger	
	3) Sol. Circulation Pump, Sol. Spray Pump, Ref. Spray Pump, Purge Pump	
	4) Burner	
	5) Control Panel - Panel unit - Lamps(Operation, Stop, Alarm), Button(Reset, Operation, Stop), Touch Screen - Circuit Brakers, Relays, PLC controller	
	6) Purge device - Purge storage tank, Ejector, Oil trap, Manometer, Piping and manual valves	
	7) Interconnecting piping and wiring - Refrigerant & Solution Piping for internal mechanical components - Control & Power wiring for internal electrical components	
Initial charge	Absorbent Solution(Lithium Bromide) with inhibitor, Refrigerant(distilled water)	
Painting	Painting for chiller assembly and control panel - Chiller body : Sky Blue (Munsel No. 7.3B 5.1/9.0) - Control panel : Light Yellow (Munsel No. 5Y 7.0/1.0)	
Insulation	Insulation of cold surface and hot surface for absorption chiller	Option
Test & Inspection	1) Check of external dimensions	Vendor
	2) Hydraulic pressure test for water boxes	
	3) Leak test (Vacuum side)	
	4) Function test for electric circuit and safety device	
Performance Test	Factory test	Option
Installation & wiring work	1. Foundation of chiller	Buyer
	2. Installation of chiller (Only, vendor supply vibration-proof rubber, base plate)	
	3. Piping and wiring connections out of chiller	
	4. Interlock wiring of chilled water pump, cooling water pump	
Start-up operation test	At site with vendor	Option

※ Items to be confirmed when ordering

① Purpose : General air conditioning, Process cooling, etc.

② Specification

- Cooling/Heating Capacity : usRT, Kw
- Chilled/Cooling/Hot water : inlet/outlet temperature(℃), flowrate(m^3/h)
- Power supply : voltage, frequency
- Fuel : kind, heating value(gas:high, oil:low), supply pressure in case of gas

③ Installation condition : indoor, outdoor, special consideration(ex. Sea water, etc.), having noise or gas(Nox, etc.) emission regulation

④ Operation condition : year-round operating, 24-hour operating

02

High Efficiency Steam Driven Absorption Chiller

22 Cooling Cycle
23 Automatic Sensing & Safety Apparatus
24 Specifications
27 Foundation
28 Control Panel & Wiring
29 Thermal Insulation
30 Steam Control Valve
31 Piping Plan
33 Performance Curve
34 Supply Scope(Standard)

[Cooling Cycle]

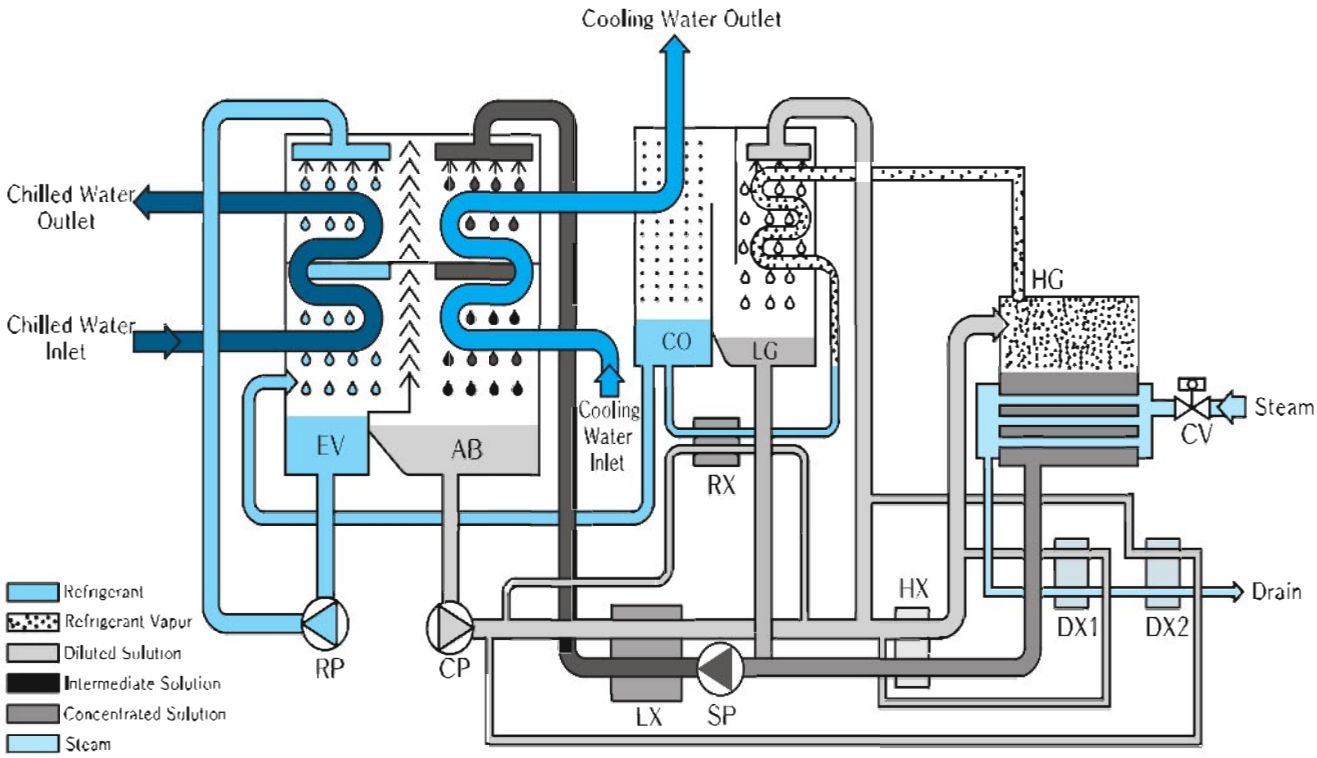

■Symbol Explanation

EV	evaporator
AB	absorber
CO	condenser
LG	low temperature generator
HG	high temperature generator
LX	low heat exchanger
HX	high heat exchanger
RX	condensed refrigerant heat exchanger
DX1	drain heat exchanger #1
DX2	drain heat exchanger #2
CP	solution circulation pump
SP	solution spray pump
RP	refrigerant spray pump
CV	steam control valve

■Solution Flow

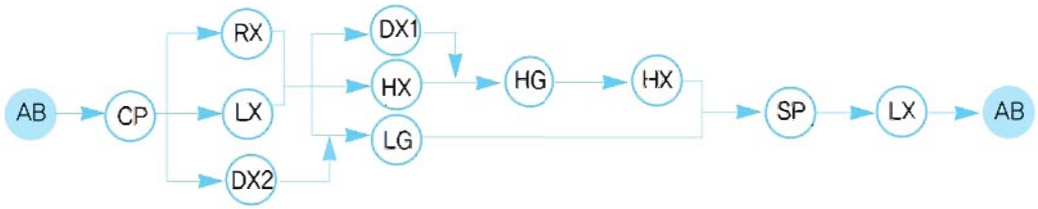

[Automatic Sensing & Safety Apparatus]

1. Installation Location

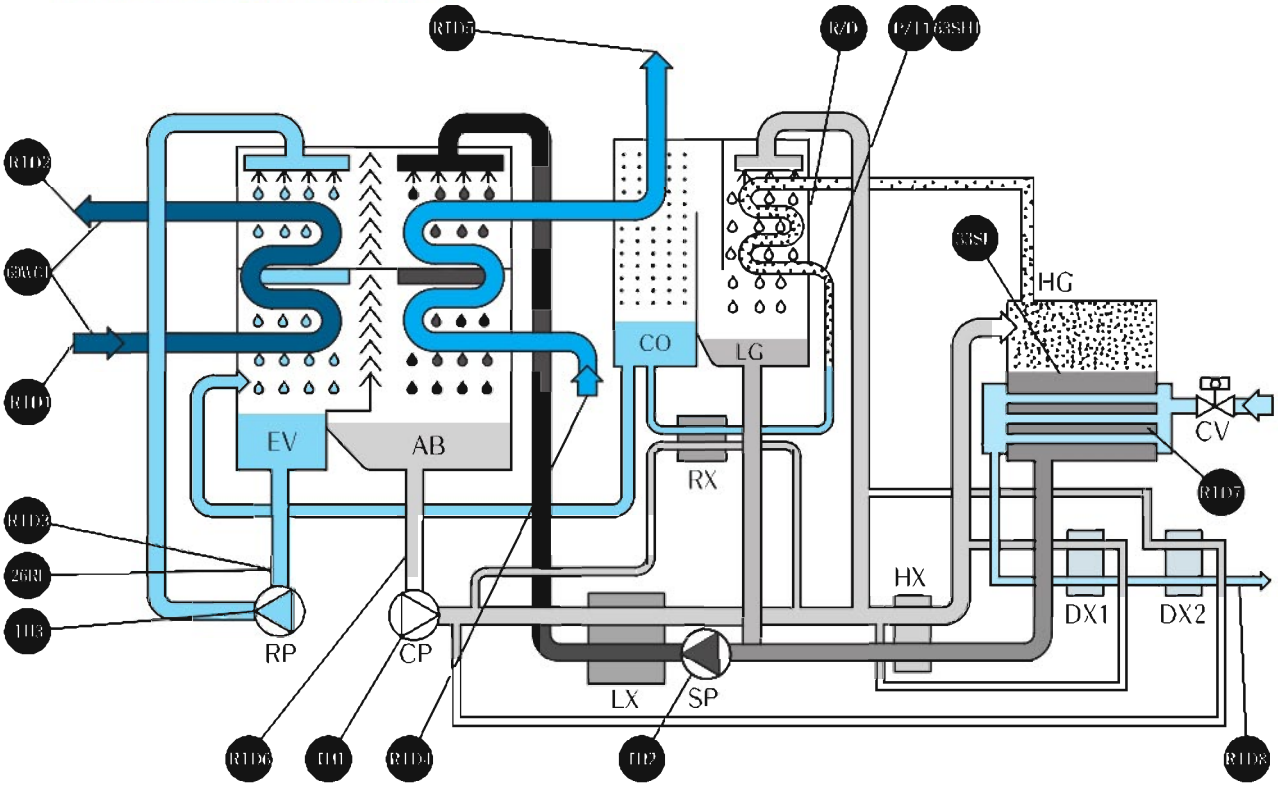

2. Explanation of Control & Protection Unit

Mark	Title	Function
RTD1	Temp Sensor for CHW inlet	· detect each temperature, pressure · control target temperature of CHW · ON-OFF control · control over-cooled of CHW & Ref. of EV · control limit of load · cut pressure of HG · monitor poor heat transfer of HG · monitor poor heat transfer of CW
RTD2	Temp Sensor for CHW outlet	
RTD3	Temp Sensor for Ref. of EV	
RTD4	Temp Sensor for CW inlet	
RTD5	Temp Sensor for CW outlet	
RTD6	Temp Sensor for Sol. of AB	
RTD7	Temp Sensor for Sol. of HG	
RTD8	Temp Sensor for Drain Water	
P/T1	Pressure Sensor for Ref. Vapor of HG	
26RL	Temp Switch for Ref. of EV	prevent over-cooled of Ref. of EV and stop chiller
63SH1	Pressure Switch for Ref. Vapor of HG	prevent over-pressure of HG and stop chiller(with dilution)
33SL	Level Relay for Sol. of HG	monitor low level of Sol. of HG and stop chiller(with dilution)
69WC1	Cut-off Switch for CHW/HW	monitor flow of CHW/HW and stop chiller
TH1	Thermal Relay for CP	monitor over current of CP and stop chiller
TH2	Thermal Relay for SP	monitor over current of SP and stop chiller
TH3	Thermal Relay for RP	monitor over current of RP and stop chiller
R/D	Rupture Disk	burst a round thin plate when reach at a set pressure and protect chiller body from a serious damage

[Specifications]

ITEM(UNIT) \ SAC-BW			50T	60T	70T	80T	100T	120T	140T	150T	180T
REFRIGERATION CAPACITY		USRT	50	60	70	80	100	120	140	150	180
		kW	176	211	246	281	352	422	492	527	633
CHILLED WATER	TEMP.	℃	12 ℃ → 7 ℃								
	FLOW RATE	m^3/h	30.2	36.3	42.3	48.4	60.5	72.6	84.7	90.7	108.9
	PRESSURE DROP	mAq	4.4	5.1	4.4	4.7	4.4	5.0	5.5	5.4	6.3
	PIPE CONNECTION SIZE	A	65		80		100				125
	NO. of PASS	EA	EVEN								ODD
COOLING WATER	TEMP.	℃	32 ℃ → 37 ℃								
	FLOW RATE	m^3/h	50.4	60.5	70.5	80.6	100.8	120.9	141.1	151.2	181.4
	PRESSURE DROP	mAq	6.2	7.0	6.5	6.7	6.8	7.3	7.6	7.2	8.8
	PIPE CONNECTION SIZE	A	80		100		125				150
	NO. of PASS	EA	EVEN								ODD
ELECTRIC POWER	POWER SUPPLY	–	3Ø 380V 50Hz								
	ELECTRIC CAPACITY	KVA	7.3				8.6				10.3
	SOLUTION PUMP	kW/(A)	1.1(4.0)+1.2(4.0)				1.5(5.5)+1.2(4.0)				2.0(6.5)+1.5(5.5)
	REFRIGERANT PUMP		0.2(1.1)				0.3(1.6)				
	VACUUM PUMP		0.75(2.0)								
STEAM	PRESSURE	kg/cm^2G	8								
	MAX CONSUMPTION	kg/h	195	234	273	312	390	468	546	585	702
	INLET PIPE DIAMETER	A	65								
	OUTLET PIPE DIAMETER	A	20								
DIMENSIONS	LENGTH(L)	mm	2,286		2,766		2,836				3,226
	WIDTH(W)	mm	1,664		1,712		1,763		1,949		
	HEIGHT(H)	mm	2,091		2,126		2,504				
WEIGHT	SHIPPING WEIGHT	ton	3.0	3.0	3.5	3.6	4.3	4.4	4.7	4.7	5.4
	OPERATION WEIGHT	ton	3.9	3.9	4.4	4.5	5.6	5.7	6.2	6.3	7.3
WATER QUANTITY	CHILLED WATER	ℓ	114	122	143	153	216	230	258	272	340
	COOLING WATER		155	166	195	210	312	333	384	406	488
EXCHANGE SPACE OF TUBE		mm	1,850		2,450		2,550				3,220

1. 1USRT = 3024kcal/h(3.516kW)
2. Fouling factor of chilled water, cooling water : 0.0001 $m^2h℃/kcal$(0.000086m^2K/W)
3. The maximum working pressure for chilled water, cooling water : 10 Kg/cm^2G(0.98MPaG)
4. The capacity control range for standard specification.(capacity, chilled water, cooling water) : 100 ~ 25%(Steam proportional control)
5. The power supply can be applied 3Ø 220V/380V/440V 50Hz also.
6. These specification can be changed without notice for technical improvements.

[Specifications]

ITEM(UNIT) \ SAC-BW			210T	240T	280T	320T	360T	400T	450T	500T	560T	630T
REFRIGERATION CAPACITY		USRT	210	240	280	320	360	400	450	500	560	630
		kW	738	844	985	1125	1266	1407	1582	1758	1969	2215
CHILLED WATER	TEMP.	℃	12 ℃ → 7 ℃									
	FLOW RATE	m^3/h	127.0	145.2	169.3	193.5	217.7	241.9	272.2	302.4	338.7	381.0
	PRESSURE DROP	mAq	5.3	5.8	4.8	5.3	4.4	4.7	5.3	5.7	7.9	7.9
	PIPE CONNECTION SIZE	A	125		150				200			
	NO. of PASS	EA	EVEN		ODD							
COOLING WATER	TEMP.	℃	32 ℃ → 37 ℃									
	FLOW RATE	m^3/h	211.6	241.9	282.2	322.5	362.8	403.1	453.5	503.9	564.3	634.9
	PRESSURE DROP	mAq	7.0	7.5	6.5	6.9	6.6	6.6	7.2	7.5	9.5	9.2
	PIPE CONNECTION SIZE	A	150		200				250		300	
	NO. of PASS	EA	EVEN		ODD							
ELECTRIC POWER	POWER SUPPLY	–	3Ø 380V 50Hz									
	ELECTRIC CAPACITY	KVA	10.9		11.6		13.2		17.4			
	SOLUTION PUMP		2.4(7.5)+1.5(5.5)		2.4(7.5)+2.0(6.5)		3.4(10.0)+2.0(6.5)		3.7(13.0)+2.2(7.0)			
	REFRIGERANT PUMP	kW/(A)	0.3(1.6)		0.4(1.6)				1.5(4.5)			
	VACUUM PUMP		0.75(2.0)									
STEAM	PRESSURE	kg/㎠G	8									
	MAX. CONSUMPTION	kg/h	819	936	1092	1248	1404	1560	1755	1950	2184	2457
	INLET PIPE DIAMETER	A	65				100					
	OUTLET PIPE DIAMETER	A	20				25					
DIMENSIONS	LENGTH(L)	mm	3,708		4,508		4,599		4,860		5,658	
	WIDTH(W)	mm	1,949				2,031		2,207		2,394	
	HEIGHT(H)	mm	2,504		2,516		2,960					
WEIGHT	SHIPPING WEIGHT	ton	6.3	6.3	7.3	7.4	8.9	9.1	10.2	10.3	12.2	12.5
	OPERATION WEIGHT	ton	8.5	8.7	10.1	10.3	12.4	12.6	14.5	14.7	17.6	18.2
WATER QUANTITY	CHILLED WATER	ℓ	392	414	456	483	603	634	768	801	922	1,001
	COOLING WATER		559	594	646	690	837	888	1,079	1,133	1,405	1,532
EXCHANGE SPACE OF TUBE		mm	3,870		4,670		4,600		4,800		5,500	

1. 1USRT = 3024kcal/h(3.516kW)
2. Fouling factor of chilled water, cooling water : 0.0001 $m^2h℃/kcal$(0.000086m^2K/W)
3. The maximum working pressure for chilled water, cooling water : 10 Kg/cm^2G(0.98MPaG)
4. The capacity control range for standard specification.(capacity, chilled water, cooling water) : 100 ~ 25%(Steam proportional control)
5. The power supply can be applied 3Ø 220V/380V/440V 50Hz also.
6. These specification can be changed without notice for technical improvements.

[Specifications]

ITEM(UNIT) \ SAC-BW			700T	800T	900T	1000T	1100T	1250T	1350T	1500T
REFRIGERATION CAPACITY		USRT	700	800	900	1000	1100	1250	1350	1500
		kW	2461	2813	3165	3516	3868	4395	4747	5274
CHILLED WATER	TEMP.	℃	12 ℃ → 7 ℃							
	FLOW RATE	m^3/h	423.4	483.8	544.3	604.8	665.3	756.0	816.5	907.2
	PRESSURE DROP	mAq	10.6	8.0	11.0	14.2	3.4	4.6	4.1	5.3
	PIPE CONNECTION SIZE	A	200	250		300			350	
	NO. of PASS	EA	ODD				EVEN			
COOLING WATER	TEMP.	℃	32 ℃ → 37 ℃							
	FLOW RATE	m^3/h	705.4	806.2	907	1007.7	1108.5	1259.6	1360.4	1511.6
	PRESSURE DROP	mAq	12.3	9.1	12.3	15.9	9.4	12.5	11.3	14.5
	PIPE CONNECTION SIZE	A	300	350			400			
	NO. of PASS	EA	ODD							
ELECTRIC POWER	POWER SUPPLY	–	3Ø 380V 50Hz							
	ELECTRIC CAPACITY	KVA	19.4		24.7	26.0	30.6		32.9	
	SOLUTION PUMP	kW/(A)	4.5(16.0)+2.2(7.0)		5.5(20.0)+3.0(11.0)		7.5(25.0)+3.7(13.0)		7.5(25.0)+4.5(16.0)	
	REFRIGERANT PUMP	kW/(A)	1.5(4.5)			1.8(6.5)			2.2(7.0)	
	VACUUM PUMP	kW/(A)	0.75(2.0)							
STEAM	PRESSURE	kg/㎠G	8							
	MAX. CONSUMPTION	kg/h	2730	3120	3510	3900	4290	4875	5265	5850
	INLET PIPE DIAMETER	A	100	125			150			
	OUTLET PIPE DIAMETER	A	25	32			40			
DIMENSIONS	LENGTH(L)	mm	6,358	5,779	6,479	6,979	6,514	7,014		7,514
	WIDTH(W)	mm	2,394	2,666			2,998		3,319	
	HEIGHT(H)	mm	2,960	3,174			3,508		3,550	
WEIGHT	SHIPPING WEIGHT	ton	13.9	15.8	17.1	18.4	20.1	21.7	22.9	24.6
	OPERATION WEIGHT	ton	20.1	23.1	25.3	27.3	30.6	33.5	34.7	37.4
WATER QUANTITY	CHILLED WATER	ℓ	1,105	1,326	1,457	1,550	1,826	1,945	2,358	2,495
	COOLING WATER	ℓ	1,680	2,050	2,240	2,376	3,160	3,348	3,904	4,122
EXCHANGE SPACE OF TUBE		mm	6,200	5,550	6,250	6,750	6,350	6,850	6,950	7,450

1. 1USRT = 3024kcal/h(3.516kW)
2. Fouling factor of chilled water, cooling water : 0.0001 $m^2h℃/kcal$(0.000086m2K/W)
3. The maximum working pressure for chilled water, cooling water : 10 Kg/cm^2G(0.98MPaG)
4. The capacity control range for standard specification.(capacity, chilled water, cooling water) : 100 ~ 25%(Steam proportional control)
5. The power supply can be applied 3Ø 220V/380V/440V 50Hz also.
6. These specification can be changed without notice for technical improvements.

[Foundation]

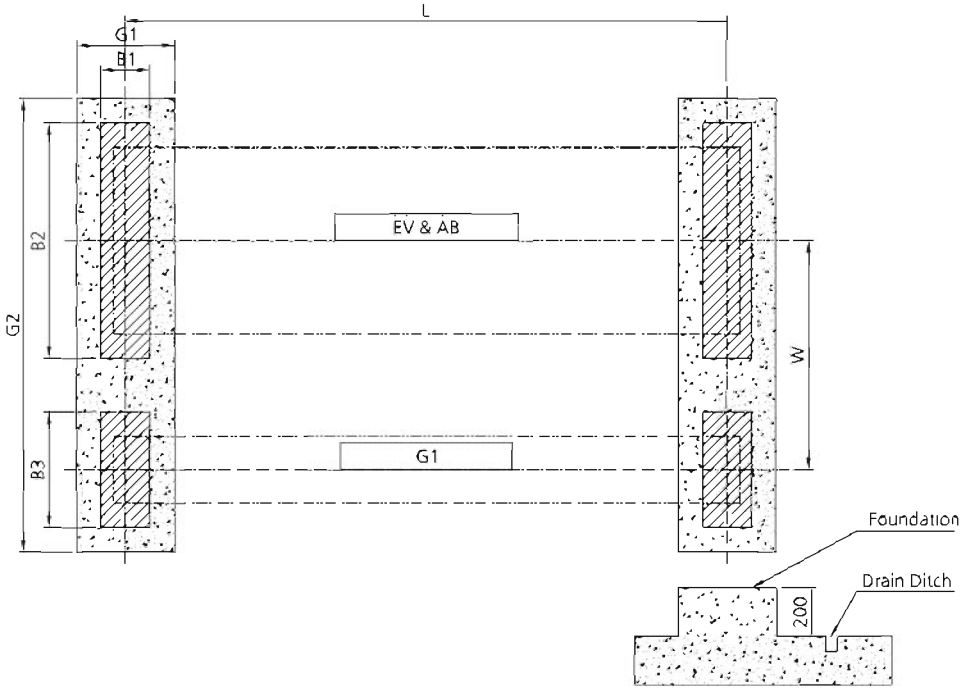

(unit : mm)

Model	G1	G2	B1	B2	B3	L	W
50T	300	1361.5	100	613	323.4	1020	692
60T							
70T	400	1413.7	200	652		1500	726
80T							
100T		1485.5		692	374.4		752.2
120T							
140T		1671.5		772			898.2
150T							
180T		1610.5				1810	837.3
210T						2460	
240T							
280T						3260	
320T							
360T	450	1820.3	250	837	462.2	3402	970.7
400T							
450T		1900.3		917		3602	1010.7
500T							
560T		1980.3		997		4302	1050.7
630T							
700T						5002	
800T	550	2285.5	350	1117	558	4200	1248
900T						4900	
1000T						5400	
1100T		2415.3		1191	608.8	4900	1315.4
1250T						5400	
1350T		2558.3		1327		5400	1390.4
1500T						5900	

NOTE

1. Smooth the concrete foundation surface and the horizontal level must become below 1/500.
2. The horizontal level of chiller installed must become below 1/1000.
3. (▨) symbol indicates [BASE LEG] of chiller.
4. Make a drainage ditch around the chiller.

[Control Panel]

Outline

No	Description
1	Buzzer
2	Air filter
3	Purge start/stop switch
4	Run state lamp
5	Stop state lamp
6	Alarm state lamp
7	Touch screen
8	Reset switch
9	Start switch
10	Stop switch
11	Cooling fan

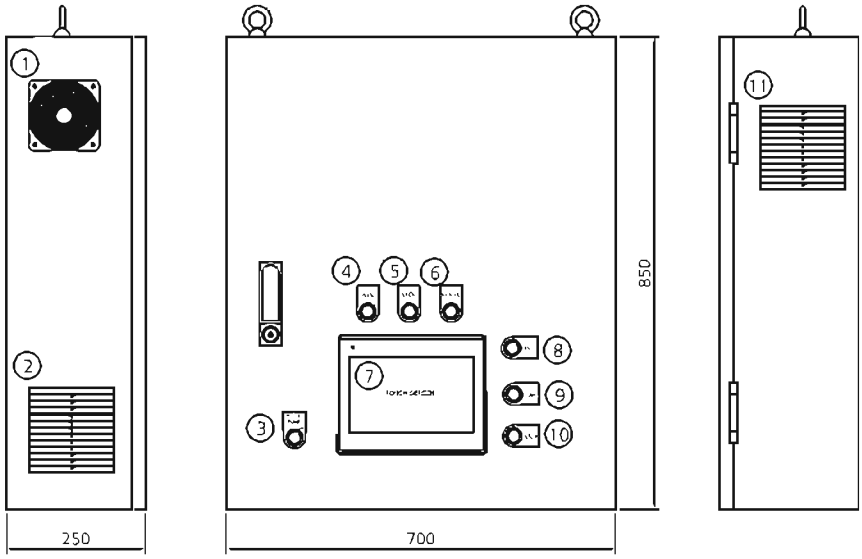

Power line

SYMBOL	Description
ELB-M	Main Circuit Breaker
KM-CP	Solution Circulation Pump M/C
KM-SP	Solution Spray Pump M/C
KM-RP	Refrigerant Pump M/C
KM-AP	Purge Pump M/C
INV	INVERTER
Th-SP	Solution Spray Pump OCR
Th-RP	Refrigerant Pump OCR
Th-AP	Purge Pump OCR
CP-C	Control circuit protect
TR	Transformer

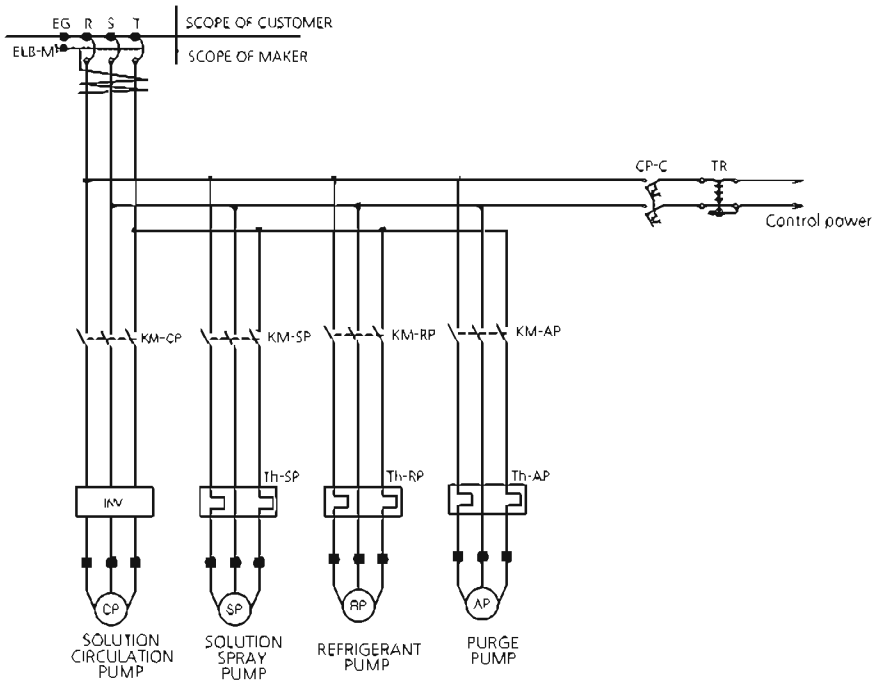

Wiring

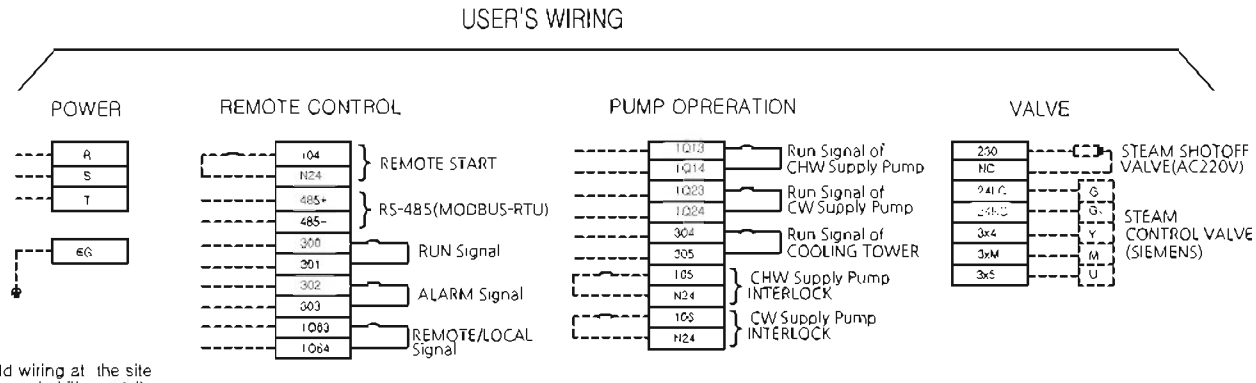

Note

---- is field wiring at the site after completion of chiller installation

[Thermal Insulation]

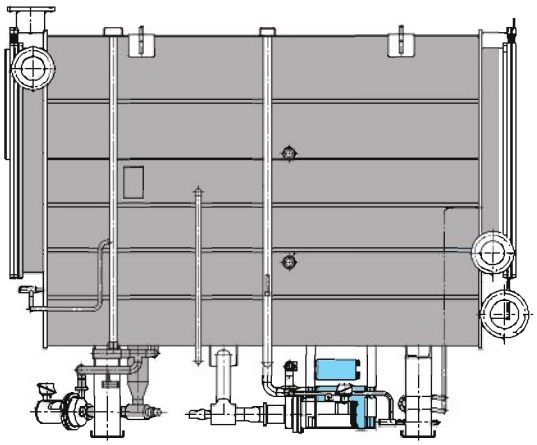

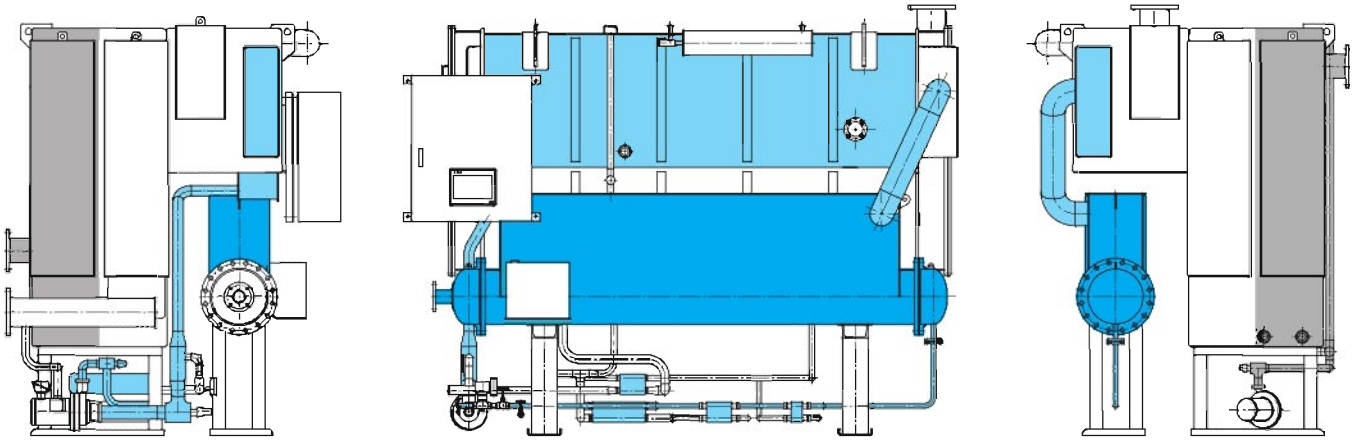

	Mark	Material	Thickness	Finishing Material	Note
Hot Surface		Glass Wool	50mm	Galvanized Plate 0.6t	-
		Glass Wool	100mm	Galvanized Plate 0.6t	HG Outside
Cold Surface		Polyethylene	20mm	-	-

※ Color SKY BLUE(7.5B 5.1/9.0)

■ Cold Surface and Hot Surface

SAC-BW	50T,60T	70T,80T	100T,120T	140T,150T	180T	210T,240T	280T,320T	360T,400T	450T,500T
Cold Surface(㎡)	5	6	7	8	10	12	14	16	18
Hot Surface(㎡)	6	7	9	10	11	12	13	15	17
SAC-BW	560T,630T	700T	800T	900T	1000T	1100T	1250T	1350T	1500T
Cold Surface(㎡)	20	22	23	25	26	27	28	30	33
Hot Surface(㎡)	20	21	23	25	27	29	30	31	34

NOTE

1. Use only noncombustible material.
2. Valve control part, sight glass, thermometer gauge, thermowell, pressure gauge and pump motors are not insulated.
3. For insulation area for each model, please refer to the picture below.
4. Part that requires a insulation, please refer to the picture above.
5. The water box sections should be worked to be disassembled for the repair.
6. Please install an insulating materials by using adhesive, mending and etc.
7. Total insulation area includes piping.

[Steam Control Valve]

1. DIMENSIONS

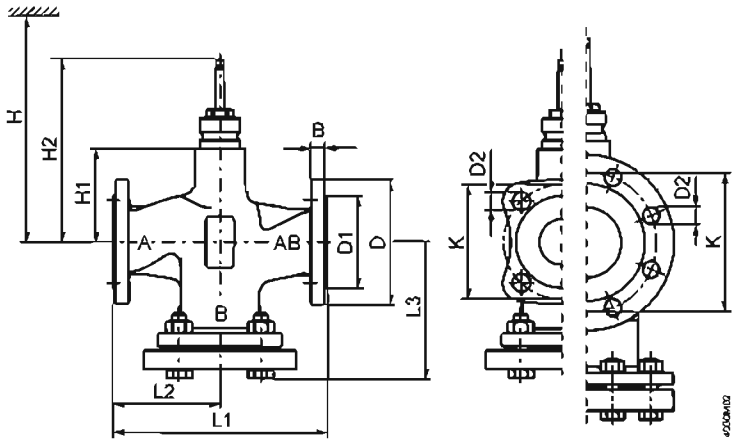

CHILLER MODEL	VALVE SIZE	H [mm]	H1 [mm]	H2 [mm]	K [mm]	L1 [mm]	L2 [mm]	L3 [mm]	B [mm]	D [mm]	D1 [mm]	D2 [mm]	G [kg]
50T~140T	25A	638	63	159.5	85	160	80	104.5	15	115	65	14(4x)	6.1
150T~320T	40A	635	60	156.5	110	200	100	129	16	150	84	19(4x)	10.2
360T~500T	50A	675	100	196.5	125	230	115	146	16	165	99	19(4x)	13.7
560T~800T	65A	690	115	231.5	145	290	145	178	17	185	118	19(8x)	21.8
900T~1350T	80A	690	115	231.5	160	310	155	190	17	200	132	19(8x)	28.1
1500T	100A	721	146	262.5	190	350	175	212.5	17	235	156	28(8x)	38.0

2. Standard Electronics

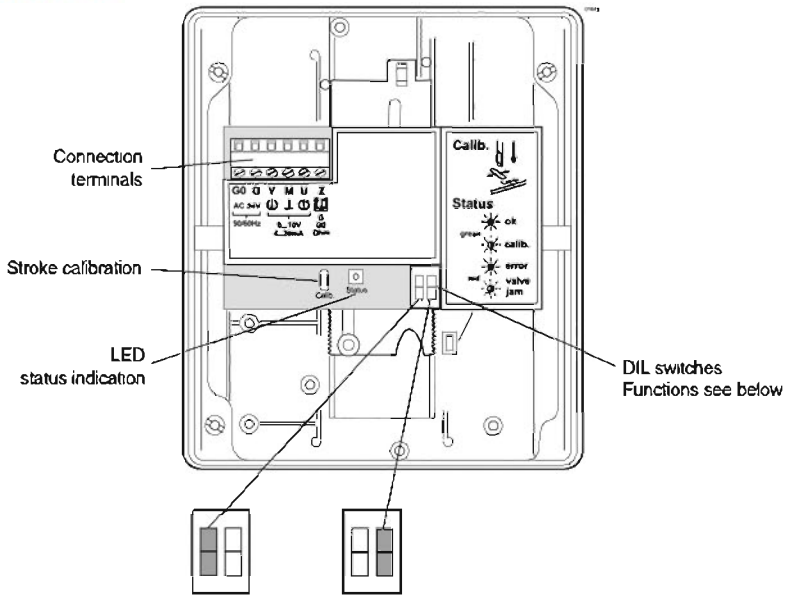

NOTE

1. This page is specifications of SIEMENS. (SIEMENS is standard valve supplier of our company.)
2. These specifications can be changed with notice for technical improvements.
3. Please receive approval documents of vendor before starting the construction.

[Piping Plan]

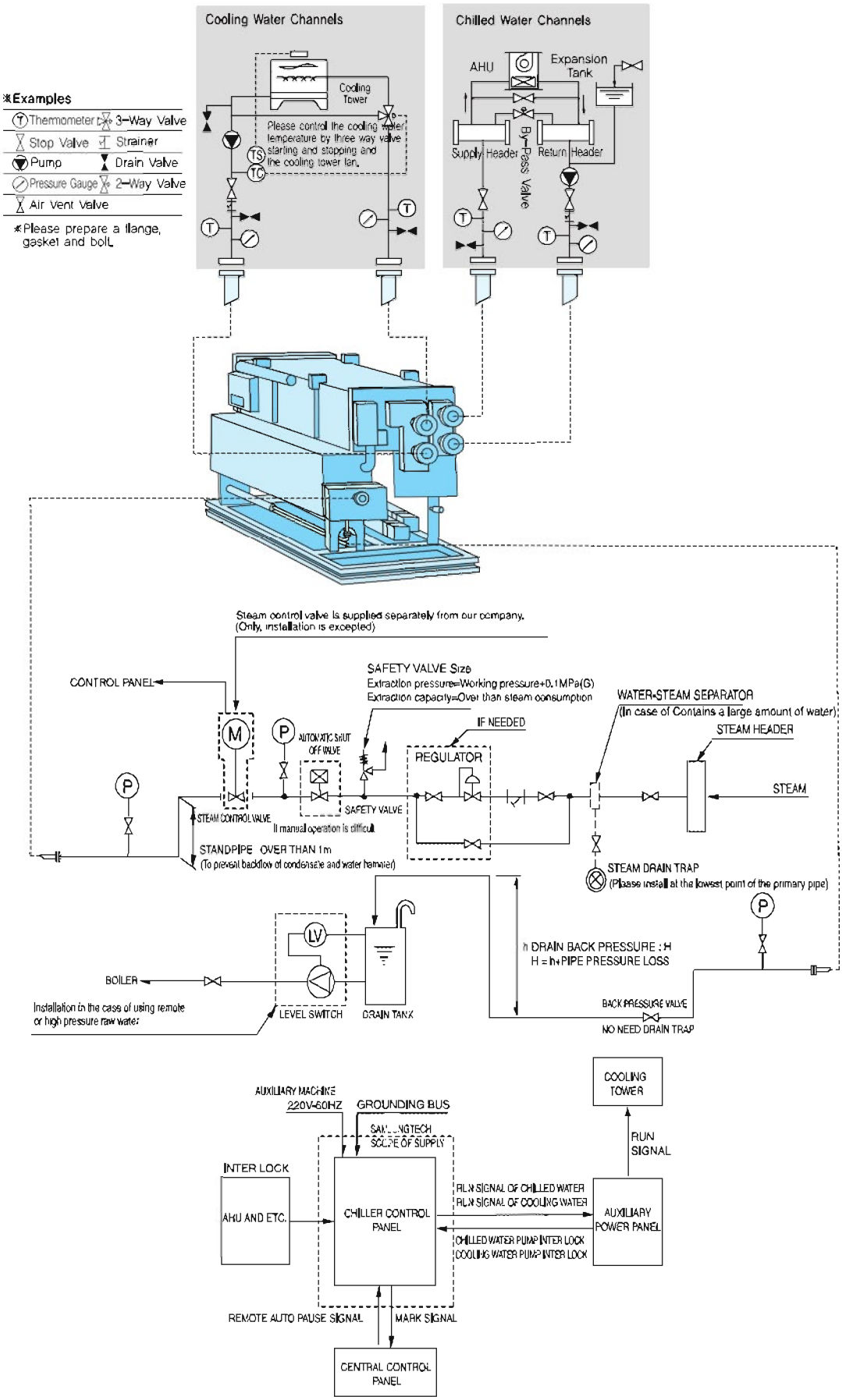
※Examples
Thermometer
3-Way Valve
Stop Valve
Strainer
Pump
Drain Valve
Pressure Gauge
2-Way Valve
Air Vent Valve
※Please prepare a flange, gasket and bolt.
Cooling Water Channels
Cooling Tower
Please control the cooling water temperature by three way valve starting and stopping and fine cooling tower fan.
Chilled Water Channels
AHU
Expansion Tank
Supply Header
By-Pass Valve
Return Header
Steam control valve is supplied separately from our company. (Only, installation is excepted)
CONTROL PANEL
SAFETY VALVE Size
Extraction pressure=Working pressure+0.1MPa(G)
Extraction capacity=Over than steam consumption
IF NEEDED
WATER-STEAM SEPARATOR
(In case of Contains a large amount of water)
STEAM HEADER
AUTOMATIC SHUT OFF VALVE
REGULATOR
STEAM
STEAM CONTROL VALVE
SAFETY VALVE
If manual operation is difficult
STANDPIPE OVER THAN 1m
(To prevent backflow of condensate and water hammer)
STEAM DRAIN TRAP
(Please install at the lowest point of the primary pipe)
h DRAIN BACK PRESSURE : H
H = h+PIPE PRESSURE LOSS
BOILER
Installation in the case of using remote or high pressure raw water
LEVEL SWITCH
DRAIN TANK
BACK PRESSURE VALVE
NO NEED DRAIN TRAP
COOLING TOWER
AUXILIARY MACHINE 220V-60HZ
GROUNDING BUS
SAMJUNGTECH SCOPE OF SUPPLY
RUN SIGNAL
INTER LOCK
AHU AND ETC.
CHILLER CONTROL PANEL
RUN SIGNAL OF CHILLED WATER
RUN SIGNAL OF COOLING WATER
AUXILIARY POWER PANEL
CHILLED WATER PUMP INTER LOCK
COOLING WATER PUMP INTER LOCK
REMOTE AUTO PAUSE SIGNAL
MARK SIGNAL
CENTRAL CONTROL PANEL

[Piping Plan]

1. Attention for the execution of piping work for chilled water and cooling water

① Water piping should be installed as shown in the picture.

② Please refer to approval drawing of our company for the directions for water inlet/outlet.

③ Make sure chiller does not get the pressure over 8 kg/㎠G.
(Please consult our company in case the pressure is over 8 kg/㎠G.)

④ Please install the drain valve at the lowest point between the valve and chiller.

⑤ Please install the air vent valve higher than the chiller.

⑥ Please install the thermometer, pressure gauge, valve and etc. as shown in the picture.

⑦ Please install the expansion tank as shown in the picture in case of chiller water channels do not open.

⑧ Please install 20MESH strainer. Too much contaminated materials in the chiller water channel may cause the freezing of chilled water in the tube and blockage of cooling water channel may cause too much pressure during operation and corrode the tube.

⑨ Please secure water supply source for cleaning the tube.

⑩ Please install the chilled water pump and cooling water pump in front of the chiller, to prevent the heat loss due to infiltration air.

⑪ Please refer to the water quality management of cooling water.
Please keep the water quality standard by install a device for blowing the cooling water in order to prevent deterioration of water quality due to concentration of the cooling water.

2. Attention for the execution of piping work for steam and steam drain

① Steam drain piping should be installed as shown in the picture.

② Steam supply pressure should plan to be in the specification pressure at the inlet of the steam control valve.
A permissible range of pressure variation (Specification pressure −1 ~ Specification pressure +0.5kgf/cm^{2}G) If the pressure variation is large, control becomes unstable and it has failure in the chiller. Also, it can influence life of pumps and control panel.

③ Please install the steam control valve, shut-off valve and pressure gauge in the position as shown in the picture and please to construction the wiring work up the control panel.

④ Such as foreign object is stuck in the steam control valve cause failure in control valve and they can cause chiller failure of not be able to control the steam flow rate.
Please install 60~70MESH strainer in the position as shown in the picture.
Also, after installing the piping, please perform sufficient flashing.

⑤ During the chiller stopped by shutting off the steam, please prevent the inflow of steam at high temp. generator.
If manual operation is difficult, please install the automatic shut off valve interlocked with chiller.
(ex. Remote auto pause signal and operating number pause signal and etc.)

⑥ Please connect the start interlock prevents operation without steam.
When operating a long time in a state that steam is not flowing, the chiller will failure.

⑦ Please install the back pressure valve and pressure gauge in the position as shown in the picture in drain pipe and it can adjust drain back pressure.
(STANDARD DRAIN BACK PRESSURE Max. 1 kgf/cm^{2}G)

⑧ The drain pipe does not require a drain trap.
Because drain from the chiller are sufficiently supercooled condensate.

⑨ Drain piping should be installed a separate piping for each chiller.

⑩ Please refer to installing plan of our company for the directions for steam and drain inlet/outlet.

[Performance Curve]

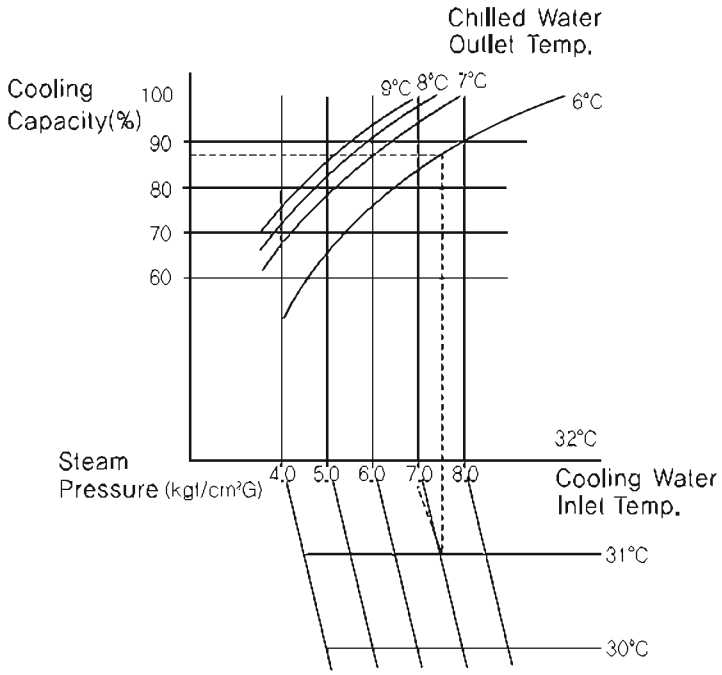

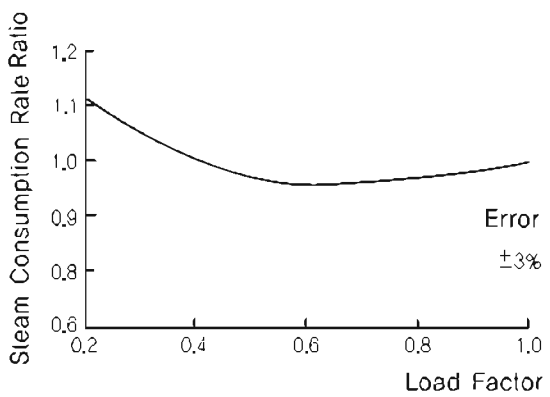

Load Factor and Steam Consumption Rate Ratio
(Cooling Water 32°C, Chilled Water 7°C constant)

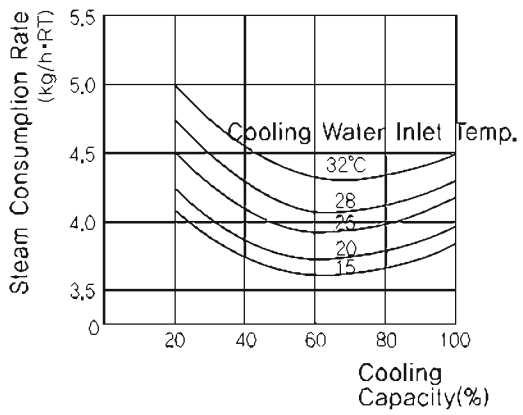

Characteristic of Steam Driven
Absorption Chiller
(Chilled Water Outlet 7℃ constant)

*It can be changed according to the operation condition.

[Supply Scope(Standard)]

Division	Description	Scope
Chiller Assembly	1) 2-stage Evaporator, 2-stage Absorber, Condenser, Low temp. Generator, High temp. Generator	Vendor
	2) Low/high temp. Sol. Heat Exchanger, Condensated Ref. Heat Exchanger, 2-Drain Heat Exchanger	
	3) Sol. Circulation Pump, Sol. Spray Pump, Ref. Spray Pump, Purge Pump	
	4) Control Panel - Panel unit - Lamps(Operation, Stop, Alarm), Button(Reset, Operation, Stop), Touch Screen - Circuit Brakers, Relays, PLC controller	
	5) Purge device - Purge storage tank, Ejector, Oil trap, Manometer, Piping and manual valves	
	6) Interconnecting piping and wiring - Refrigerant & Solution Piping for internal mechanical components - Control & Power wiring for internal electrical components	
Initial charge	Absorbent Solution(Lithium Bromide) with inhibitor, Refrigerant(distilled water)	
Painting	Painting for chiller assembly and control panel - Chiller body : Sky Blue (Munsel No. 7.3B 5.1/9.0) - Control panel : Light Yellow (Munsel No. 5Y 7.0/1.0)	
Insulation	Insulation of cold surface and hot surface for absorption chiller	Option
Test & Inspection	1) Check of external dimensions	Vendor
	2) Hydraulic pressure test for water boxes	
	3) Leak test (Vacuum side)	
	4) Function test for electric circuit and safety device	
Installation & wiring work	1. Foundation of chiller	Buyer
	2. Installation of chiller (Only, vendor supply vibration-proof rubber, base plate)	
	3. Piping and wiring connections out of chiller	
	4. Interlock wiring of chilled water pump, cooling water pump	
	5. Installation and wiring of control valve	
Start-up operation test	At site with vendor	Option

※ Items to be confirmed when ordering

① Purpose : General air conditioning, Process cooling, etc.

② Specification

- Cooling Capacity : usRT, Kw
- Chilled/Cooling water : inlet/outlet temperature(℃), flowrate(m^3/h)
- Power supply : voltage, frequency
- Steam supply pressure

③ Installation condition : indoor, outdoor, special consideration(ex. Sea water, etc.), having copper emission regulation

④ Operation condition : year-round operating, 24-hour operating

03

Single Effect Hot Water Driven Absorption Chiller

36 Cooling Cycle

37 Automatic Sensing & Safety Apparatus

38 Specifications

40 Foundation

41 Control Panel & Wiring

42 Thermal Insulation

43 Piping Plan

44 Supply Scope(Standard)

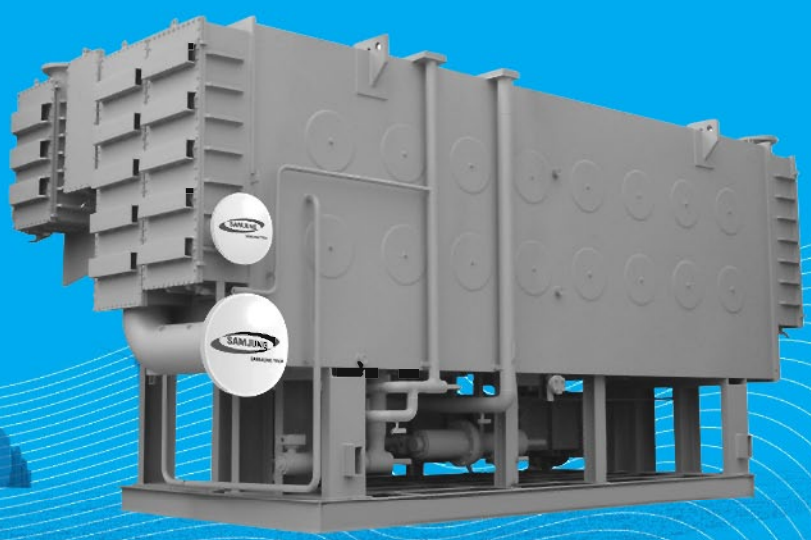

[Cooling Cycle]

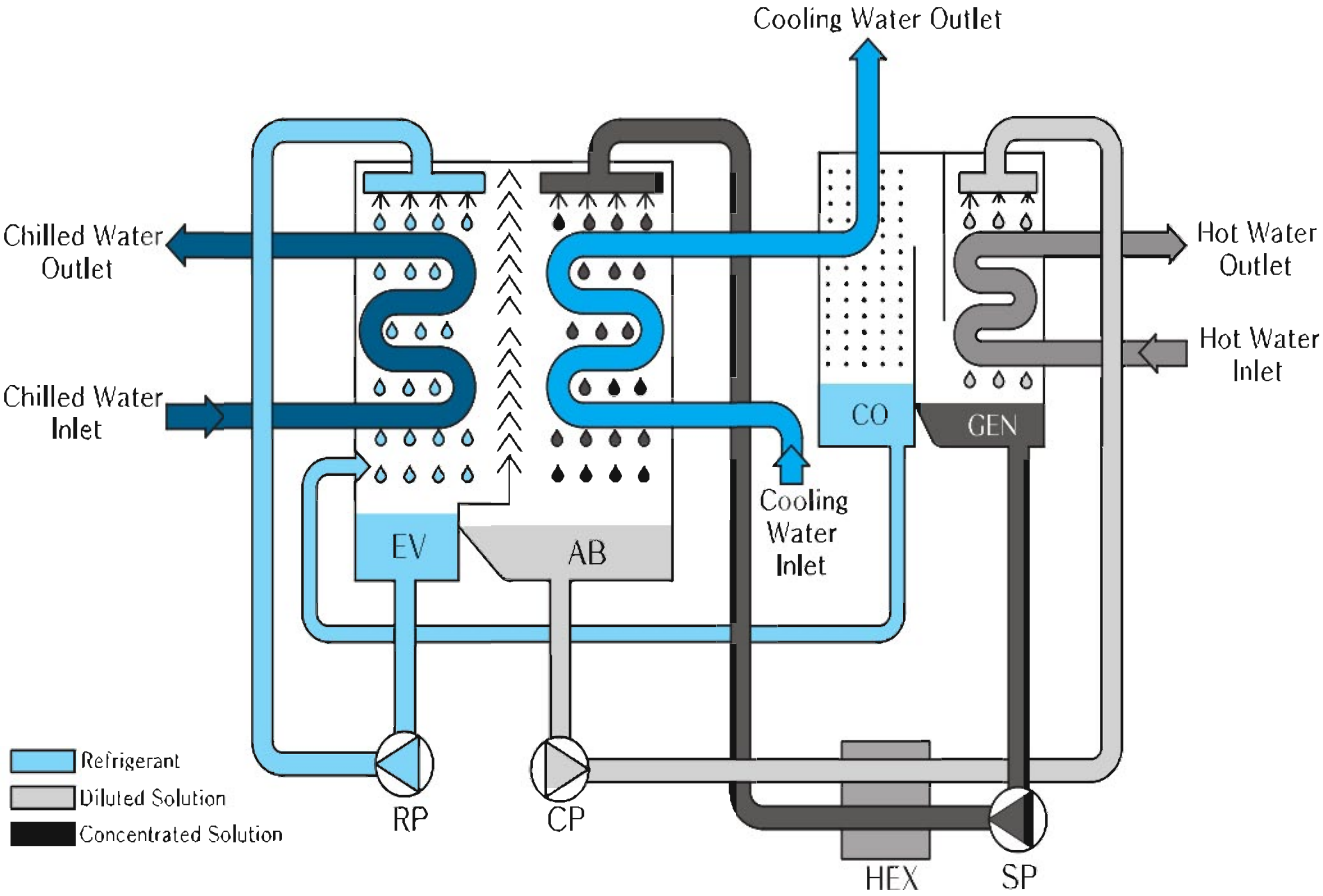

■Symbol Explanation

EV	evaporator
AB	absorber
CO	condenser
GEN	generator
HEX	heat exchanger
CP	solution circulation pump
SP	solution spray pump
RP	refrigerant spray pump

■Solution Flow

AB → CP → HEX → GEN → SP → HEX → AB

[Automatic Sensing & Safety Apparatus]-Similar to Double Lift DLT-TYPE

1. Installation Location

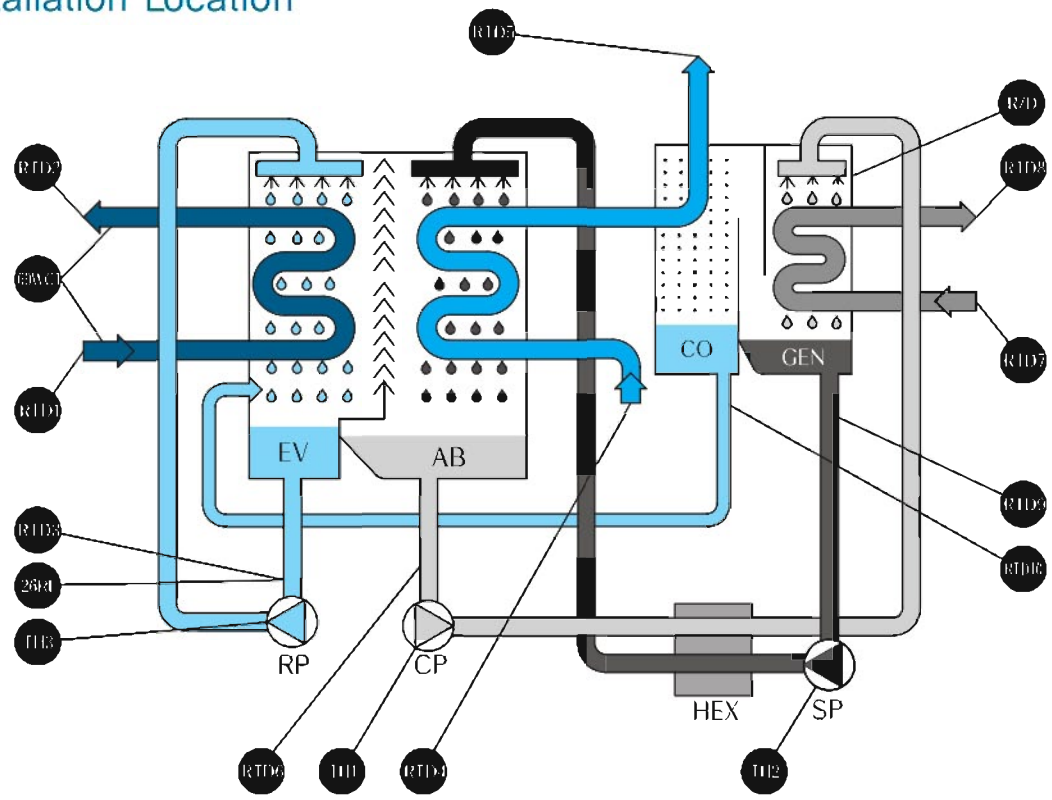

2. Explanation of Control & Protection Unit

Mark	Title	Function
RTD1	Temp Sensor for CHW inlet	· detect each temperature · control target temperature of CHW · ON-OFF control · control over-cooled of CHW & Ref. of EV · control limit of load · monitor poor heat transfer of CW
RTD2	Temp Sensor for CHW outlet	
RTD3	Temp Sensor for Ref. of EV	
RTD4	Temp Sensor for CW inlet	
RTD5	Temp Sensor for CW outlet	
RTD6	Temp Sensor for Sol. of AB	
RTD7	Temp Sensor for HW inlet	
RTD8	Temp Sensor for HW outlet	
RTD9	Temp Sensor for Sol. of GEN	
RTD10	Temp Sensor for Ref. of CO	
26RL	Temp Switch for Ref. of EV	prevent over-cooled of Ref. of EV and stop chiller
69WC1	Cut-off Switch for CHW/HW	monitor flow of CHW/HW and stop chiller
TH1	Thermal Relay for CP	monitor over current of CP and stop chiller
TH2	Thermal Relay for SP	monitor over current of SP and stop chiller
TH3	Thermal Relay for RP	monitor over current of RP and stop chiller
R/D	Rupture Disk	burst a round thin plate when reach at a set pressure and protect chiller body from a serious damage

[Specifications]

ITEM(UNIT)		SAC-M	65E1	80E1	100E1	120E1	140E1	160E1	190E1	210E1	240E1	270E1	310E1	340E1
REFRIGERATION CAPACITY		USRT	65	80	100	120	140	160	190	210	240	270	310	340
		kW	229	281	352	422	492	563	668	738	844	949	1,090	1,196
CHILLED WATER	TEMP.	℃	12 ℃ → 7 ℃											
	FLOW RATE	m^3/h	39.3	48.4	60.5	72.6	84.7	96.8	114.9	127.0	145.2	163.3	187.5	205.6
	PRESSURE DROP	mAq	4.8	5.2	7.2	5.2	6.2	4.8	5.5	4.1	4.3	4.4	5.9	5.9
	PIPE CONNECTION SIZE	A	80		100			125				150		
	NO. of PASS	EA	ODD					EVEN		ODD				
COOLING WATER	TEMP.	℃	31 ℃ → 36.5 ℃											
	FLOW RATE	m^3/h	85.0	104.7	130.8	157.0	183.2	209.3	248.6	274.7	314.0	353.2	405.5	444.8
	PRESSURE DROP	mAq	5.4	5.8	6.7	7.1	8.6	3.2	3.8	5.7	6.4	5.9	7.9	7.9
	PIPE CONNECTION SIZE	A	125			150		200				250		
	NO. of PASS	EA	EVEN			ODD								
HOT WATER	TEMP.	℃	95℃ → 80℃											
	FLOW RATE	m^3/h	18.1	22.3	27.8	33.4	38.9	44.5	52.8	58.4	66.7	75.1	86.2	94.5
	PRESSURE DROP	mAq	1.1	1.1	1.3	1.4	1.5	2.3	2.6	2.5	2.6	2.5	3.4	3.4
	PIPE CONNECTION SIZE	A	65					100				125		
	NO. of PASS	EA	ODD			EVEN				ODD		EVEN		
ELECTRIC POWER	POWER SUPPLY	–	3Ø 380V 50Hz											
	ELECTRIC CAPACITY	KVA	7.4		10.1			11.5				13.6		
	SOLUTION PUMP(CIR.)	kW/(A)	1.1(4.0)		2.0(6.5)			2.4(7.5)				3.4(10.0)		
	SOLUTION PUMP(SPRAY)	kW/(A)	1.1(4.0)		1.5(5.5)			2.0(6.5)				2.2(7.0)		
	REFRIGERANT PUMP	kW/(A)	0.2(1.3)		0.2(1.3)			0.3(1.5)				0.4(1.6)		
	VACUUM PUMP	kW/(A)	0.75(2.0)		0.75(2.0)			0.75(2.0)				0.75(2.0)		
DIMENSIONS	LENGTH(L)	mm	2,620			3,138		3,888		4,388		4,328	4,628	
	WIDTH(W)	mm	1,736			1,736		1,819				2,153		
	HEIGHT(H)	mm	2,146									2,224		
WEIGHT	SHIPPING WEIGHT	ton	4.0	4.1	4.3	5.2	5.4	5.8	5.9	6.5	6.6	8.0	8.5	8.7
	OPERATION WEIGHT	ton	4.6	4.7	4.9	5.8	6.0	6.7	6.9	7.5	7.8	9.4	9.9	10.2
WATER QUANTITY	CHILLED WATER	ℓ	114	130.3	135.3	159.5	168.2	204.5	226.6	232.4	257.9	284.1	304.9	332.6
	COOLING WATER	ℓ	278.4	305.1	333	378.5	392.3	458.8	491.7	518.5	547.9	680.9	722.5	779.2
	HOT WATER	ℓ	117.4	134.8	147.7	179.4	198.1	240.4	262.3	273	299.2	343.4	368.4	398.6
EXCHANGE SPACE OF TUBE		mm	2,350			2,850		3,550		4,050			4,300	

1. 1USRT = 3024kcal/h(3.516kW)
2. Fouling factor of chilled water, cooling water, hot water : 0.0001 $m^2h℃/kcal$(0.000086m^2K/W)
3. The capacity control range for standard specification.(capacity, chilled water, cooling water) : 100 ~ 25%
4. The maximum working pressure for chilled water, cooling water, hot water
   - Chilled water & Cooling water : 10 kg/cm^2G(0.98MPaG)
   - Hot water : 16 kg/cm^2G(1.57MPaG)
5. The power supply is can apply 3Ø 220/380/440V 50Hz also.
6. These specifications can be changed without notice for technical improvements.

[Specifications]

ITEM(UNIT)		SAC-M	370E1	420E1	470E1	520E1	570E1	640E1	710E1	780E1	850E1	920E1	1000E1
REFRIGERATION CAPACITY		USRT	370	420	470	520	570	640	710	780	850	920	1000
		kW	1,301	1,477	1,653	1,828	2,004	2,250	2,497	2,743	2,989	3,235	3,516
CHILLED WATER	TEMP.	℃	12 ℃ → 7 ℃										
	FLOW RATE	m^3/h	223.8	254.0	284.3	314.5	344.7	387.1	429.4	471.7	514.1	556.4	604.8
	PRESSURE DROP	mAq	7.4	10.0	6.1	5.5	7.0	5.9	7.7	7.4	9.3	6.6	8.2
	PIPE CONNECTION SIZE	A	200					250				300	
	NO. of PASS	EA	EVEN			ODD							
COOLING WATER	TEMP.	℃	31 ℃ → 36.5 ℃										
	FLOW RATE	m^3/h	484.0	549.4	614.9	680.3	745.7	837.2	928.8	1020.4	1112.0	1203.5	1308.2
	PRESSURE DROP	mAq	5.0	6.7	8.9	7.8	9.9	7.9	10.2	10.4	12.9	10.8	13.3
	PIPE CONNECTION SIZE	A	300					350		400			
	NO. of PASS	EA	ODD										
HOT WATER	TEMP.	℃	95℃ → 80℃										
	FLOW RATE	m^3/h	102.9	116.8	130.7	144.6	158.5	178	197.4	216.9	236.4	255.8	278.1
	PRESSURE DROP	mAq	1.6	2.1	2.8	2.6	3.3	2.6	3.3	3.7	4.6	4.4	5.5
	PIPE CONNECTION SIZE	A	150					200					
	NO. of PASS	EA	EVEN										
ELECTRIC POWER	POWER SUPPLY	-	3Ø 380V 50Hz										
	ELECTRIC CAPACITY	KVA	17.1		21.1			27.6		31.9		35.2	
	SOLUTION PUMP(CIR.)	kW/(A)	4.5(13.0)		5.5(15.0)			5.5(20.0)		5.5(20.0)		7.5(25.0)	
	SOLUTION PUMP(SPRAY)	kW/(A)	2.2(7.0)		3.0(11.0)			4.5(16.0)		5.5(20.0)		5.5(20.0)	
	REFRIGERANT PUMP	kW/(A)	1.1(4.0)		1.1(4.0)			1.1(4.0)		1.8(6.5)		1.8(6.5)	
	VACUUM PUMP	kW/(A)	0.75(2.0)		0.75(2.0)			0.75(2.0)		0.75(2.0)		0.75(2.0)	
DIMENSIONS	LENGTH(L)	mm	4,834	5,034	5,486	5,486	5,986	5,596	6,096	6,438	6,938	6,438	6,938
	WIDTH(W)	mm	2,610			2,716		2,901		2,698		2,870	
	HEIGHT(H)	mm	2,721			2,815		2,880		3,013		3,507	
WEIGHT	SHIPPING WEIGHT	ton	12.0	12.3	13.5	14.8	15.6	16.8	17.8	19.1	20.3	22.2	24.0
	OPERATION WEIGHT	ton	14.0	14.5	15.9	17.5	18.6	20.3	21.6	23.5	25.0	27.6	29.8
WATER QUANTITY	CHILLED WATER	ℓ	593	608.7	740.3	810.1	874.8	983.4	1060	1227.2	1314	1648.2	1758
	COOLING WATER	ℓ	1104.5	1131.9	1229.8	1432.4	1547.5	1738.5	1879.5	2158.9	2313.6	2831	3009
	HOT WATER	ℓ	530.5	551.8	605.2	702.7	764.2	891.5	967.7	1052.1	1132.4	1133.2	1219.2
EXCHANGE SPACE OF TUBE		mm	4,350	4,550	5,200	5,200	5,700	5,150	5,650	5,800	6,300	5,800	6,300

1. 1USRT = 3024kcal/h(3.516kW)
2. Fouling factor of chilled water, cooling water, hot water : 0.0001 $m^2h℃/kcal$(0.000086m^2K/W)
3. The capacity control range for standard specification.(capacity, chilled water, cooling water) : 100 ~ 25%
4. The maximum working pressure for chilled water, cooling water, hot water
   - Chilled water & Cooling water : 10 kg/cm^2G(0.98MPaG)
   - Hot water : 16 kg/cm^2G(1.57MPaG)
5. The power supply is can apply 3Ø 220/380/440V 50Hz also.
6. These specifications can be changed without notice for technical improvements.

[Foundation]

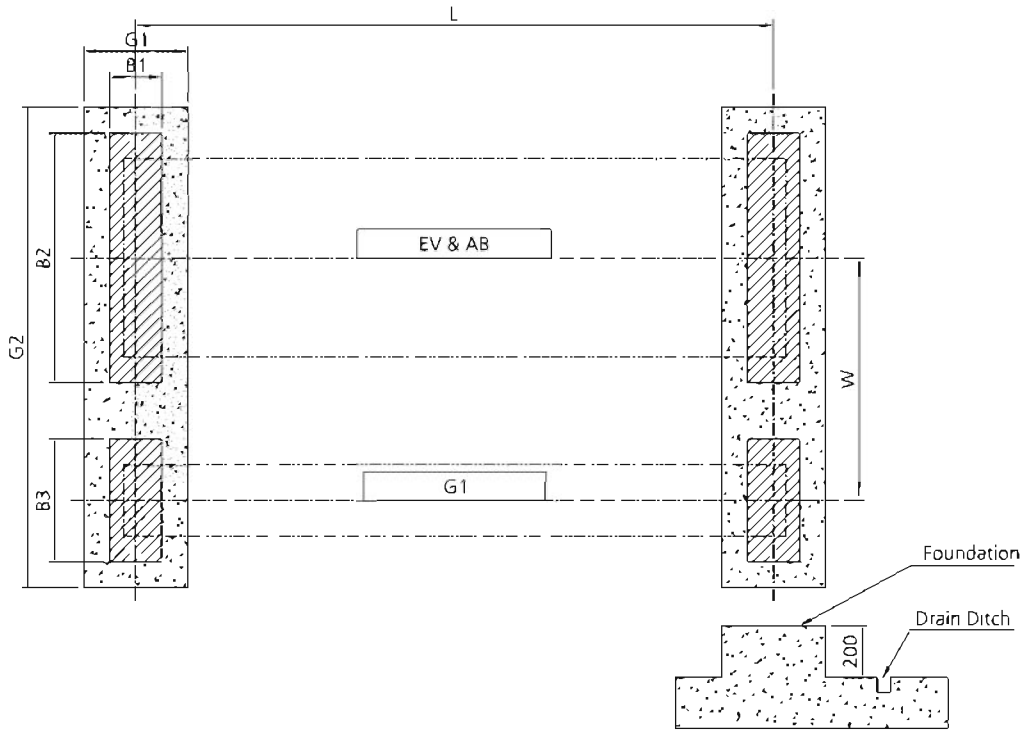

(unit : mm)

Model	G1	G2	B1	B2	B3	L	W
M65E1	500	1454.7	300	1254.7	-	1800	-
M80E1							
M100E1							
M120E1						2350	
M140E1							
M160E1		1531.8		1331.8		3000	
M190E1							
M210E1						3500	
M240E1							
M270E1		1872		817	800	3800	863.5
M310E1							
M340E1							
M370E1	600	2438.3	400	1097.8	995.5	3700	1191.7
M420E1						3900	
M470E1						4400	
M520E1		2264.4		992.9	926.5	3250	1104.7
M570E1						3750	
M640E1		2515.6		1086.1	1084.5	3250	1230.3
M710E1						3750	
M780E1		2556.6			1115.5	3950	1255.8
M850E1						4450	
M920E1		2678.8		1133.8	1190	3950	1316.9
M1000E1						4450	

NOTE

1. Smooth the concrete foundation surface and the horizontal level must become below 1/500.
2. The horizontal level of chiller installed must become below 1/1000.
3. (▨) symbol indicates [BASE LEG] of chiller.
4. Make a drainage ditch around the chiller.

[Control Panel]

Outline

No	Description
1	Buzzer
2	Air filter
3	Purge start/stop switch
4	Run state lamp
5	Stop state lamp
6	Alarm state lamp
7	Touch screen
8	Reset switch
9	Start switch
10	Stop switch
11	Cooling fan

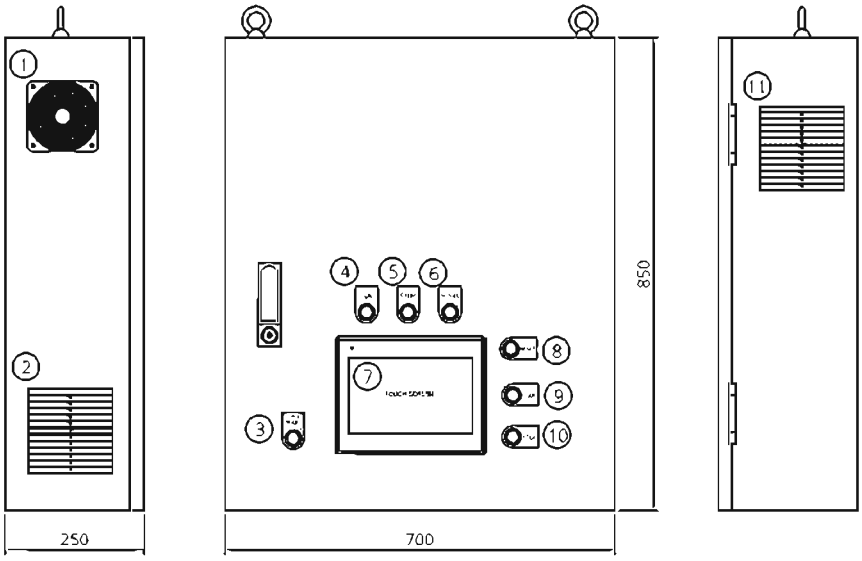

Power line

SYMBOL	Description
ELB-M	Main Circuit Breaker
KM-CP	Solution Circulation Pump M/C
KM-SP	Solution Spray Pump M/C
KM-RP	Refrigerant Pump M/C
KM-AP	Purge Pump M/C
Th-CP	Solution Circulation Pump OCR
Th-SP	Solution Spray Pump OCR
Th-RP	Refrigerant Pump OCR
Th-AP	Purge Pump OCR
CP-C	Control circuit protect
TR	Transformer

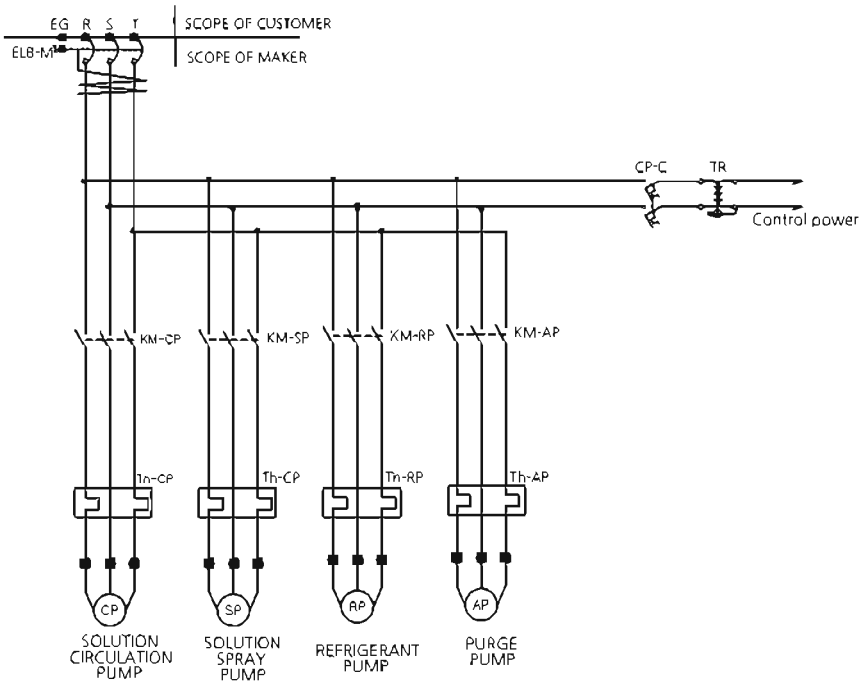

Wiring

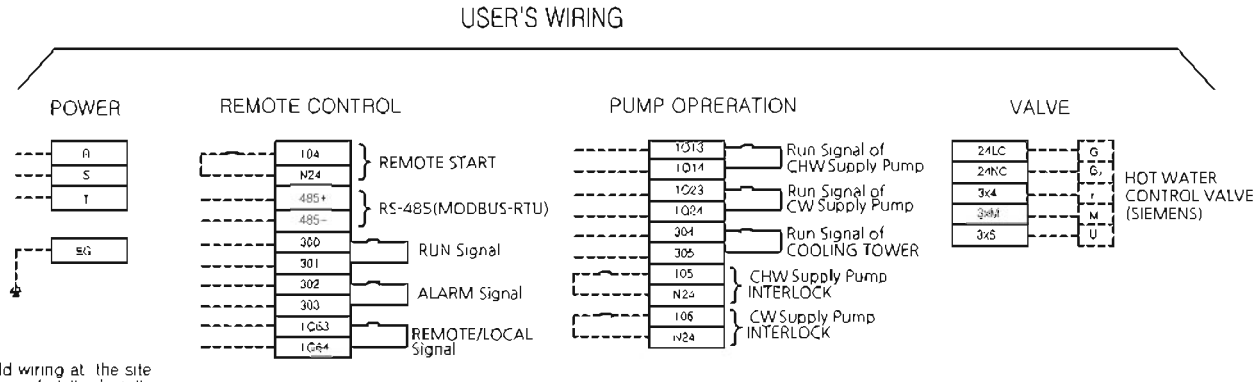

Note

---- is field wiring at the site after completion of chiller installation

[Thermal Insulation]

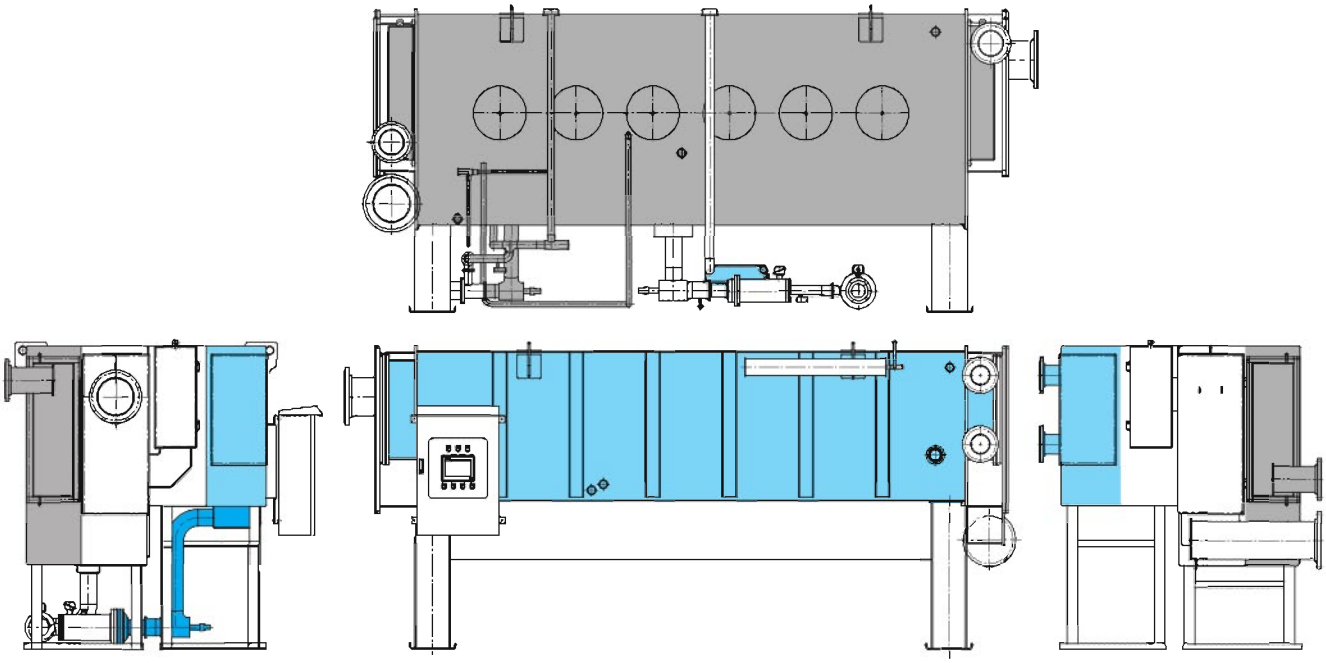

	Mark	Material	Thickness	Finishing Material	Note
Hot Surface		GLASS WOOL	50mm	Galvanized Plate 0.6t	-
		Foam Rubber	19mm	-	Pipe
Cold Surface		Polyethylene	20mm	Galvanized Plate 0.6t	-

※ Color SKY BLUE(7.5B 5.1/9.0)

■ Cold Surface and Hot Surface

SAC-M	65E1~100E1	120E1,140E1	160E1,190E1	210E1,240E1	270E1	310E1,340E1	370E1	420E1	470E1
Cold Surface(㎡)	7	8	10	11	12	13	15	16	17
Hot Surface(㎡)	5	6	7	8	9	10	12	13	14
SAC-M	520E1	570E1	640E1	710E1	780E1	850E1	920E1	1000E1	
Cold Surface(㎡)	18	19	20	21	24	26	27	29	
Hot Surface(㎡)	15	16	17	18	19	20	21	22	

NOTE

1. Use only noncombustible material.
2. Valve control part, sight glass, thermometer gauge, thermowell, pressure gauge and pump motors are not insulated.
3. For insulation area for each model, please refer to the picture below.
4. Part that requires a insulation, please refer to the picture above
5. The water box sections should be worked to be disassembled for the repair.
6. Please install an insulating materials by using adhesive , mending and etc.
7. Total insulation area includes piping.

[Piping Plan]-Equal to Double Lift DLT-TYPE

SYMBOL FOR PIPING COMPONENT	
SYMBOL	DESCRIPTION
	MANUAL VALVE
	CHECK VALVE
	CONTROL VALVE
	SOLENOID VALVE
	DRAIN VALVE
	STRAINER
	SAFETY RUPTURE DISK
	PUMP

SYMBOL FOR INSTRUMENTATION	
SYMBOL	DESCRIPTION
TG	TEMP. GAUGE
PG	PRESS. GAUGE
-----	ELECTRIC SIGNAL

GENERAL MARK	
	INLET OUTLET
	SUPPLY SCOPE
	LINE MARK

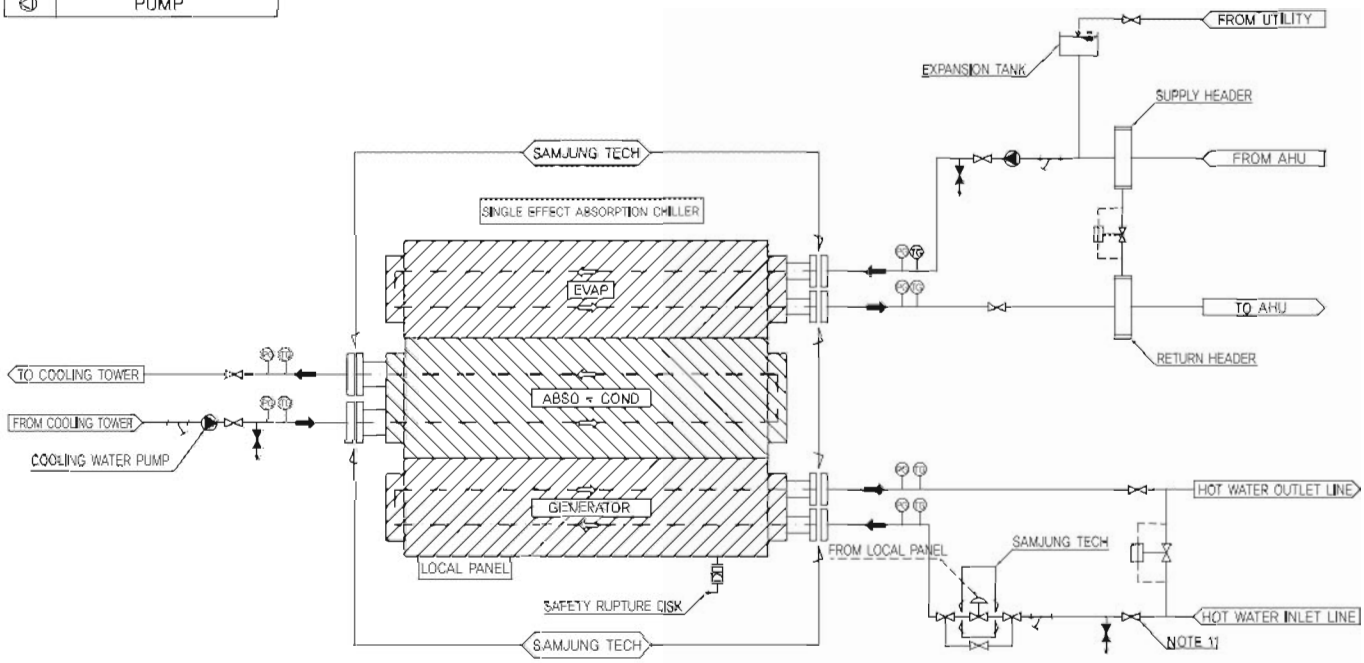

NOTE

1. The symbol indicate SJT standard scope of supply.
2. Be sure to confirm chilled water, hot water and cooling water pump position to prevent more than working pressure to chilled, hot and cooling water inlet part. (Chilled and cooling water = 10kgf/cm² G, Hot water = 16kgf/cm² G)
3. Install thermometers and pressure gauges refer to in this drawing.
4. Install drain valves at the lowest part of the piping. (Machine has own drain valves on chilled water chamber, cooling water chamber and hot water chamber.)
5. Air vent valves in water piping lines should be installed at the highest part of each line. (Machine has own air vent valves on chilled water chamber, cooling water chamber and hot water chamber.)
6. Arrange the pipings considering the space for extracting the tubes and for opening the water chambers.
7. Be sure to install a 20 mesh strainer each in the inlet side of chilled water, cooling water and hot water piping line.
8. Expansion tank should be installed chilled water piping line if closed water cycle is designed.
9. The all connection piping to be supported external to the machine.
10. Refer to installing plan for piping nozzle direction.
11. The shut off valve to attach certainly at the hot water inlet and outlet side.

[Supply Scope(Standard)]

Division	Description	Scope
Chiller Assembly	1) Evaporator, Absorber, Condenser, Generator (If DLT-TYPE, additional 2nd Generator, Aux. Absorber, Aux. Generator)	Vendor
	2) Low/high temp. Sol. Heat Exchanger (If DLT-TYPE, additional Aux. Sol. Heat Exchanger)	
	3) Sol. Circulation Pump, Sol. Spray Pump, Ref. Spray Pump, Purge Pump (If DLT-TYPE, additional 2nd Sol. Spray Pump, Aux. Sol. Circulation Pump, Aux. Sol. Spray Pump)	
	4) Control Panel - Panel unit - Lamps(Operation, Stop, Alarm), Button(Reset, Operation, Stop), Touch Screen - Circuit Brakers, Relays, PLC controller	
	5) Purge device - Purge storage tank, Ejector, Oil trap, Manometer, Piping and manual valves	
	6) Interconnecting piping and wiring - Refrigerant & Solution Piping for internal mechanical components - Control & Power wiring for internal electrical components	
Initial charge	Absorbent Solution(Lithium Bromide) with inhibitor, Refrigerant(distilled water) Painting for chiller assembly and control panel	
Painting	- Chiller body : Sky Blue (Munsel No. 7.3B 5.1/9.0) - Control panel : Light Yellow (Munsel No. 5Y 7.0/1.0)	
Insulation	Insulation of cold surface and hot surface for absorption chiller	Option
Test & Inspection	1) Check of external dimensions	Vendor
	2) Hydraulic pressure test for water boxes	
	3) Leak test (Vacuum side)	
	4) Function test for electric circuit and safety device	
Performance Test	Factory test	Option
Installation & wiring work	1. Foundation of chiller	Buyer
	2. Installation of chiller (Only, vendor supply vibration-proof rubber, base plate)	
	3. Piping and wiring connections out of chiller	
	4. Interlock wiring of chilled water pump, cooling water pump	
	5. Installation and wiring of control valve	
Start-up operation test	At site with vendor	Option

※ Items to be confirmed when ordering

① Purpose : General air conditioning, Process cooling, etc.

② Specification

- Cooling Capacity : usRT, Kw
- Chilled/Cooling/Hot water : inlet/outlet temperature(℃), flowrate(m^3/h)
- Power supply : voltage, frequency

③ Installation condition : indoor, outdoor, special consideration(ex. Sea water, etc.)

④ Operation condition : year-round operating, 24-hour operating

04

Single Effect Double Lift Hot Water Driven Absorption Chiller

46 Cooling Cycle

47 Specifications

49 Foundation

50 Control Panel & Wiring

51 Thermal Insulation

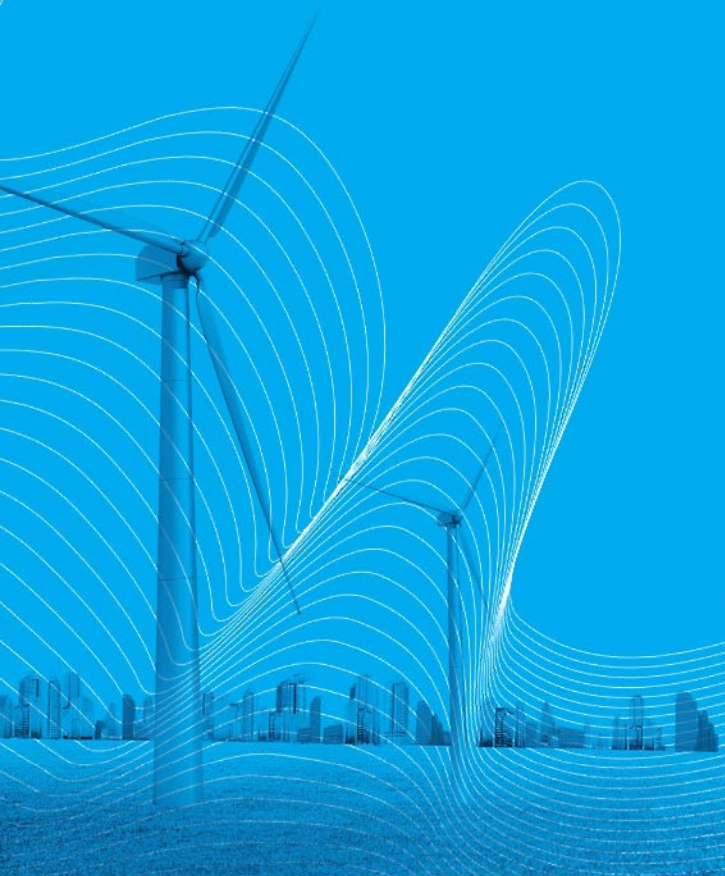

[Cooling Cycle]

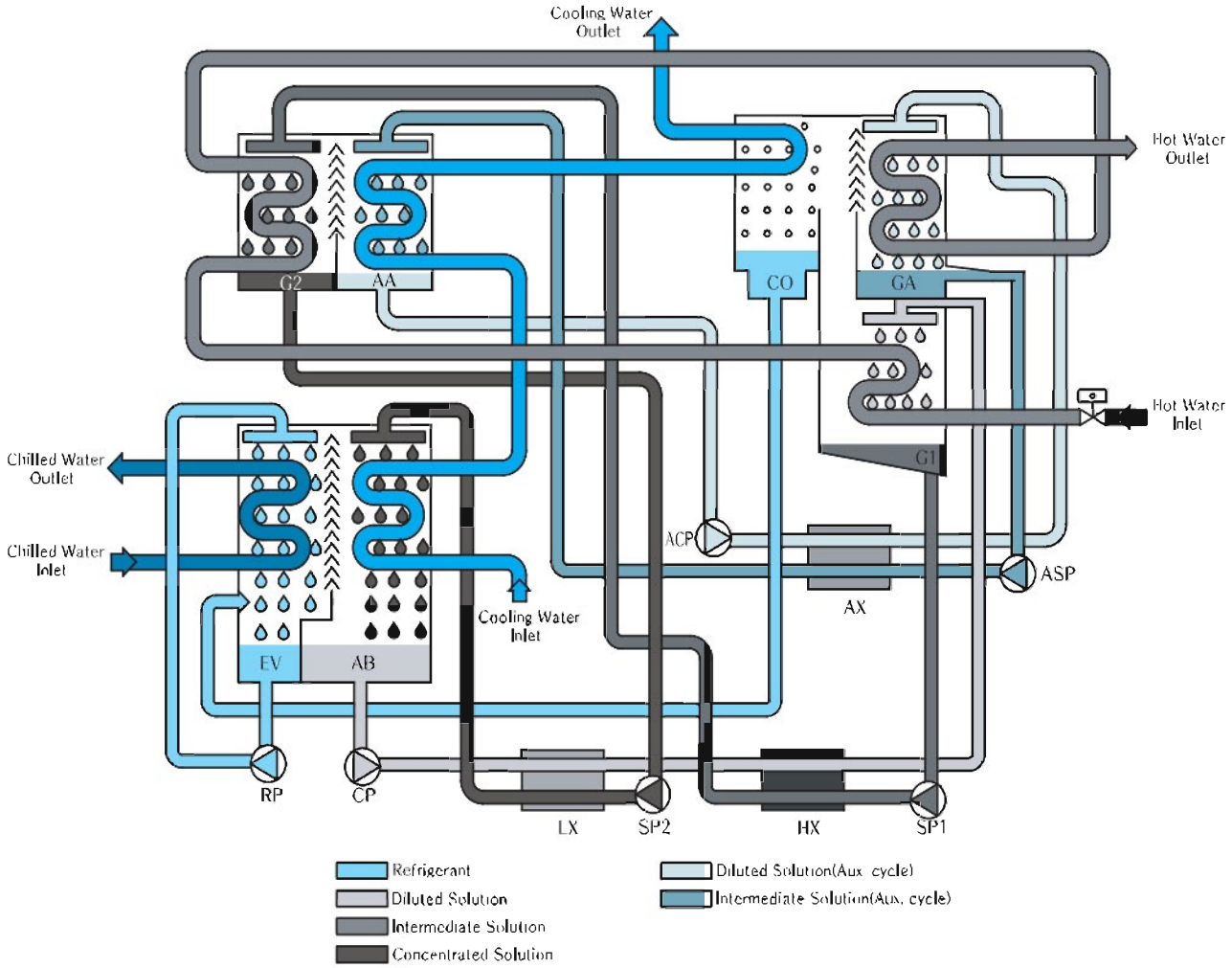

■ Symbol Explanation

EV	evaporator
AB	absorber
AA	aux. absorber
CO	condenser
G1	generator #1
G2	generator #2
GA	aux. generator
LX	low heat exchanger

HX	high heat exchanger
AX	aux. heat exchanger
CP	solution circulation pump
SP1	solution spray pump #1
SP2	solution spray pump #2
ACP	aux. solution circulation pump
ASP	aux. solution spray pump
RP	refrigerant spray pump

■ Solution Flow

1) Main Line

AB → CP → LX → HX → G1 → SP1 → HX → G2 → SP2 → LX → AB

2) Aux. Line

AA → ACP → AX → GA → ASP → AX → AA

[Specifications]

ITEM(UNIT)		SAC-DL	65T	80T	100T	120T	150T	180T	210T	240T	270T	300T	340T	370T
REFRIGERATION CAPACITY		USRT	65	80	100	120	150	180	210	240	270	300	340	370
		kW	229	281	352	422	527	633	738	844	949	1055	1196	1301
CHILLED WATER	TEMP.	℃	12 ℃ → 7 ℃											
	FLOW RATE	m^3/h	39.3	48.4	60.5	72.6	90.7	108.9	127.0	145.2	163.3	181.4	205.6	223.8
	PRESSURE DROP	mAq	3.9	4	7.4	7.5	7.0	7.5	7.8	7.6	6.6	6.1	6.9	6.3
	PIPE CONNECTION SIZE	A	80		100		125				150			
	NO. of PASS	EA	ODD				EVEN				ODD			
COOLING WATER	TEMP.	℃	31 ℃ → 36.5 ℃											
	FLOW RATE	m^3/h	92.5	113.8	140.9	169.1	211.3	253.6	295.9	338.1	380.4	422.7	479.0	521.3
	PRESSURE DROP	mAq	7.5	7.8	9.1	9.2	5.1	5.7	5.8	5.9	10.6	10.3	11.2	10.8
	PIPE CONNECTION SIZE	A	125		150		200				250			
	NO. of PASS	EA	ODD		EVEN									
HOT WATER	TEMP.	℃	95 ℃ → 55 ℃											
	FLOW RATE	m^3/h	8	9.8	12.3	14.7	18.4	22.1	25.8	29.5	33.2	36.8	41.8	45.4
	PRESSURE DROP	mAq	3	3	4.2	4.0	4.9	5.0	5.8	5.5	4.2	3.9	4.1	3.8
	PIPE CONNECTION SIZE	A	50				65		80				100	
	NO. of PASS	EA	EVEN		ODD				EVEN					
	CONTROL VALVE	A	40			50			65			80		
ELECTRIC POWER	POWER SUPPLY	–	3Ø 380V 50Hz											
	ELECTRIC CAPACITY	KVA	9.4				11.6		13.1				15.6	
	SOLUTION PUMP(1)	kW/(A)	1.2(4.0)				1.5(5.0)		2.0(6.5)				2.4(7.0)	
	SOLUTION PUMP(2)		0.4(1.6)				1.2(4.0)		1.5(5.0)				2.0(6.5)	
	SOLUTION PUMP(3)		0.4(1.6)				0.4(1.6)						0.8(3.5)	
	SOLUTION PUMP(4)		0.3(1.7)				0.3(1.7)		0.4(1.6)					
	SOLUTION PUMP(5)		0.3(1.7)				0.3(1.7)		0.4(1.6)					
	REFRIGERANT PUMP		0.3(1.6)				0.3(1.6)		0.4(1.5)					
	VACUUM PUMP		0.75(2.0)											
DIMENSIONS	LENGTH(L)	mm	2853		3,403		4,103				5,037		5,097	
	WIDTH(W)	mm	2,170				2,332		2,169				2,329	
	HEIGHT(H)	mm	2,485						2,852				2,959	
WEIGHT	SHIPPING WEIGHT	ton	5.5	5.6	6.7	6.8	8.6	8.7	10.0	10.1	11.9	12.1	13.6	13.8
	OPERATION WEIGHT	ton	6.1	6.3	7.5	7.7	9.8	10.0	11.6	11.8	13.9	14.2	16.0	16.4
WATER QUANTITY	CHILLED WATER	ℓ	100	120	150	170	220	240	290	320	350	400	430	480
	COOLING WATER		300	340	430	490	650	700	840	910	1,050	1,140	1,270	1,360
	HOT WATER		170	200	230	270	350	390	450	500	550	620	700	770
EXCHANGE SPACE OF TUBE		mm	2,650		3,200		3,900				4,700			

1. 1USRT = 3024kcal/h(3.516kW)
2. Fouling factor of chilled water, cooling water, hot water : 0.0001 $m^2h℃/kcal$(0.000086m^2K/W)
3. The maximum working pressure for chilled water, cooling water : 10 kg/cm^2G(0.98MPaG)
   The maximum working pressure for hot water : 16 kg/cm^2G(1.57MPaG)
4. The capacity control range for standard specification.(capacity, chilled water, cooling water) : 100 ~ 25%
5. The power supply is can apply 3Ø 220/380/440V 50Hz also.
6. These specifications can be changed without notice for technical improvements.

[Specifications]

ITEM(UNIT)		SAC-DL	420T	470T	520T	570T	640T	710T	800T	850T	920T	1000T	1100T	1200T
REFRIGERATION CAPACITY		USRT	420	470	520	570	640	710	800	850	920	1000	1100	1200
		kW	1477	1653	1828	2004	2250	2497	2813	2989	3235	3516	3868	4220
CHILLED WATER	TEMP.	℃	12 ℃ → 7 ℃											
	FLOW RATE	m³/h	254.0	284.3	314.5	344.7	387.1	429.4	483.8	514.1	556.4	604.8	665.3	725.8
	PRESSURE DROP	mAq	7.1	9.8	4.3	10.7	4.9	6.3	10.7	4.2	5.2	6.4	7.9	10.2
	PIPE CONNECTION SIZE	A	200			250					300			
	NO. of PASS	EA	ODD		EVEN	ODD	EVEN		ODD	EVEN				
COOLING WATER	TEMP.	℃	31 ℃ → 36.5 ℃											
	FLOW RATE	m³/h	591.7	662.2	732.6	803.1	901.7	1000.3	1127.1	1197.6	1296.2	1408.9	1549.8	1690.7
	PRESSURE DROP	mAq	10.2	11.4	15.1	10.9	14.8	19.1	11.9	12.4	15.6	21.9	14.7	18.7
	PIPE CONNECTION SIZE	A	300			350			400				450	
	NO. of PASS	EA	EVEN											
HOT WATER	TEMP.	℃	95 ℃ → 55 ℃											
	FLOW RATE	m³/h	51.6	57.7	63.9	70.0	78.6	87.2	98.2	104.4	113.0	122.8	135.1	147.4
	PRESSURE DROP	mAq	4.4	6.1	4.1	6.1	4.3	5.6	3.2	3.7	4.7	5.9	5.9	7.4
	PIPE CONNECTION SIZE	A	100			125							150	
	NO. of PASS	EA	EVEN											
	CONTROL VALVE	A	80	100					125					150
ELECTRIC POWER	POWER SUPPLY	-	3Ø 380V 50Hz											
	ELECTRIC CAPACITY	KVA	18.4	22.7		25.3		28.6	34.6		41.8		44.4	49.0
	SOLUTION PUMP(1)	kW/(A)	2.2(7.0)			3.0(11.0)		3.7(14.0)	4.5(16.0)		4.5(16.0)		5.5(20.0)	
	SOLUTION PUMP(2)		2.2(7.0)			2.2(7.0)			2.2(7.0)		3.0(11.0)		3.0(11.0)	4.5(16.0)
	SOLUTION PUMP(3)		0.8(3.5)	2.2(7.0)							3.7(14.0)		3.7(14.0)	4.5(16.0)
	SOLUTION PUMP(4)		0.8(3.5)						2.2(7.0)					
	SOLUTION PUMP(5)		0.8(3.5)						2.2(7.0)					
	REFRIGERANT PUMP		0.4(1.5)	1.5(4.5)				1.8(6.5)						
	VACUUM PUMP		0.75(2.0)											
DIMENSIONS	LENGTH(L)	mm	5,425	6,125	6,821	6,242	6,942	7,442	6,684	7,020	7,520	8,020	8,120	8,620
	WIDTH(W)	mm	2,558			2,753			3,161				3,960	
	HEIGHT(H)	mm	3,260			3,398			3,649				3,950	
WEIGHT	SHIPPING WEIGHT	ton	16.7	19.1	21.0	21.8	23.9	25.8	29.6	30.9	32.8	35.0	39.6	40.8
	OPERATION WEIGHT	ton	20.0	22.7	25.0	26.4	28.9	31.1	36.6	38.3	41.1	43.8	48.8	50.6
WATER QUANTITY	CHILLED WATER	ℓ	580	650	720	790	870	930	1,220	1,280	1,430	1,510	1,610	1,730
	COOLING WATER		1,880	2,150	2,370	2,750	3,010	3,200	4,410	4,630	5,090	5,360	5,690	6,070
	HOT WATER		910	1,020	1,130	1,300	1,430	1,530	1,820	1,930	2,070	2,210	2,370	2,560
EXCHANGE SPACE OF TUBE		mm	5,000	5,700	6,400	5,700	6,400	6,900	6,100	6,150	6,650	7,150	7,250	7,750

1. 1USRT = 3024kcal/h(3.516kW)
2. Fouling factor of chilled water, cooling water, hot water : 0.0001 m²h℃/kcal(0.000086m²K/W)
3. The maximum working pressure for chilled water, cooling water : 10 kg/cm²G(0.98MPaG)
   The maximum working pressure for hot water : 16 kg/cm²G(1.57MPaG)
4. The capacity control range for standard specification.(capacity, chilled water, cooling water) : 100 ~ 25%
5. The power supply is can apply 3Ø 220/380/440V 50Hz also.
6. These specifications can be changed without notice for technical improvements.

[Foundation]

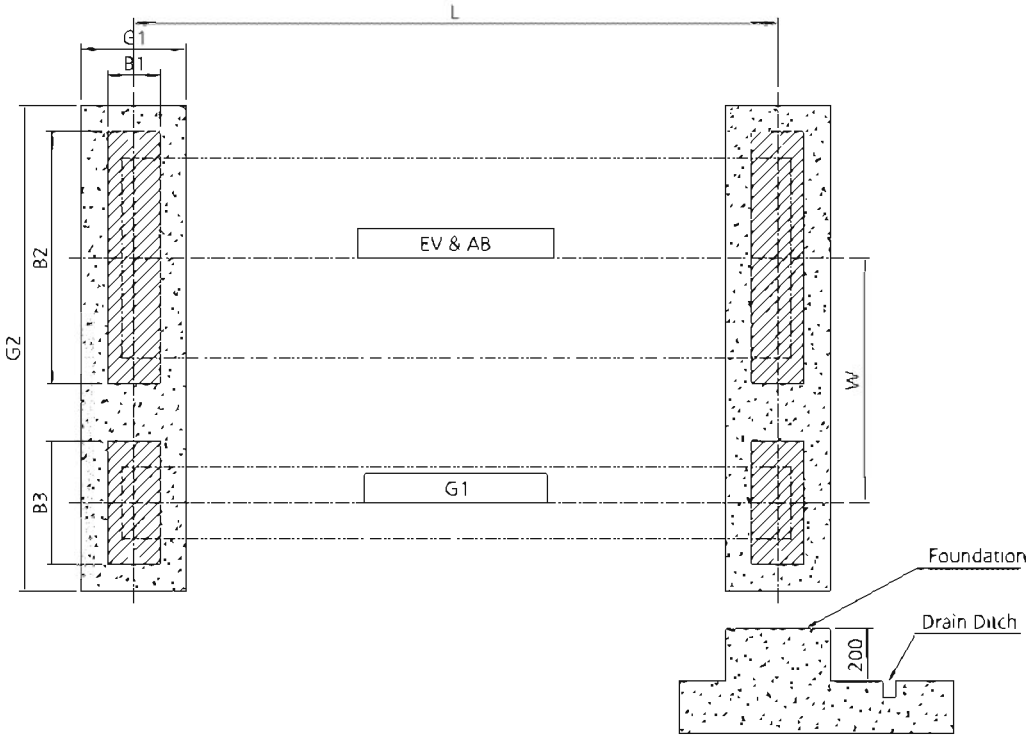

(unit : mm)

Model	G1	G2	B1	B2	B3	L	W
DL65T	400	1853.1	200	882	505.6	1260	959.3
DL80T							
DL100T						1810	
DL120T							
DL150T		2015.1		962	565.6	2460	1051.3
DL180T							
DL210T		1852.5			473		935
DL240T							
DL270T	450		250			3266	
DL300T							
DL340T		2012.5		1062	533	3260	1015
DL370T							
DL420T		2219.2		1122	618	3460	1149.2
DL470T	550		350			4060	
DL520T						4760	
DL570T		2384.2		1242	663	4050	1231.7
DL640T						4750	
DL710T						5250	
DL800T		2767.6		1497.5	738	4340	1450
DL850T						4740	
DL920T		2785.6				5240	1467.9
DL1000T						5540	
DL1100T		3927.7		2579.6	798		2038.9
DL1200T						6040	

NOTE

1. Smooth the concrete foundation surface and the horizontal level must become below 1/500.
2. The horizontal level of chiller installed must become below 1/1000.
3. (▨) symbol indicates [BASE LEG] of chiller.
4. Make a drainage ditch around the chiller.

[Control Panel]

Outline

No.	Description
1	Buzzer
2	Air filter
3	Purge start/stop switch
4	Run state lamp
5	Stop state lamp
6	Alarm state lamp
7	Touch screen
8	Reset switch
9	Start switch
10	Stop switch
11	Cooling fan

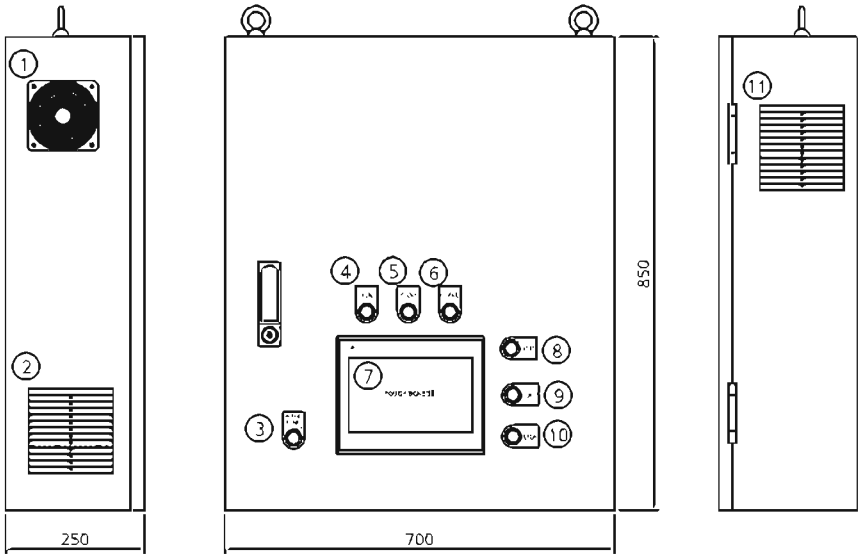

Power line

SYMBOL	Description
ELB-M	Main Circuit Breaker
KM-CP	Solution Circulation Pump M/C
KM-SP1	Solution Spray Pump 1 M/C
KM-RP	Refrigerant Pump M/C
KM-AP	Purge Pump M/C
Th-CP	Solution Circulation Pump OCR
Th-SP	Solution Spray Pump OCR
Th-RP	Refrigerant Pump OCR
Th-AP	Purge Pump OCR
CP-C	Control circuit protect
TR	Transformer
KM-SP2	Solution Spray Pump 2 M/C
KM-ACP	Assistance Circulation Pump M/C
KM-ASP	Assistance Spray Pump M/C
Th-SP2	Solution Circulation Pump2 OCR
Th-ACP	Assistance Circulation Pump OCR
Th-ASP	Assistance Spray Pump OCR

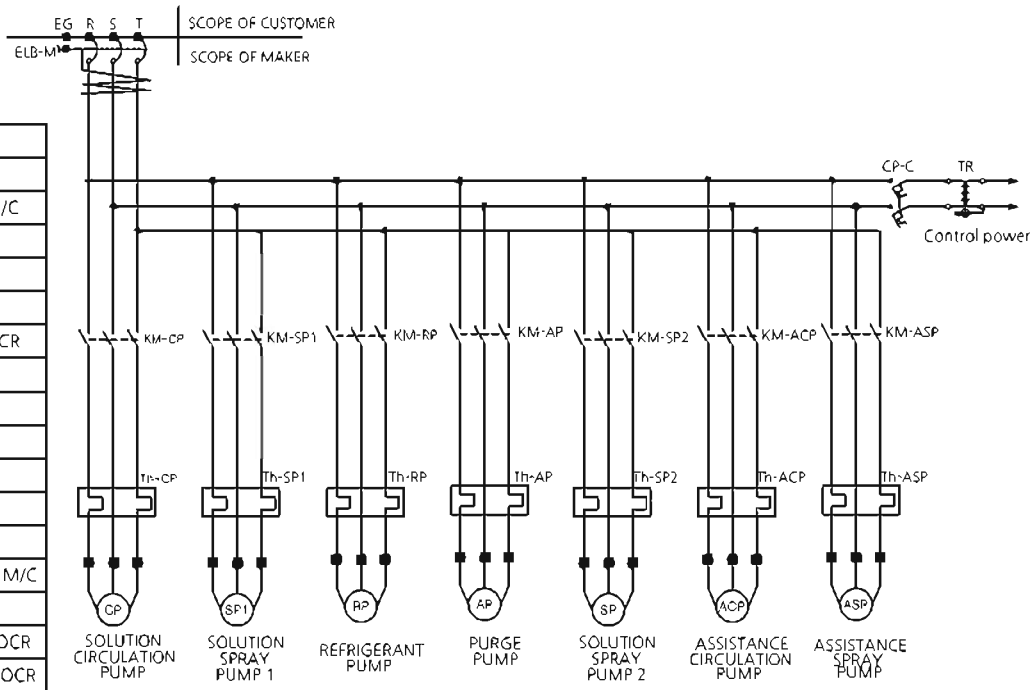

Wiring

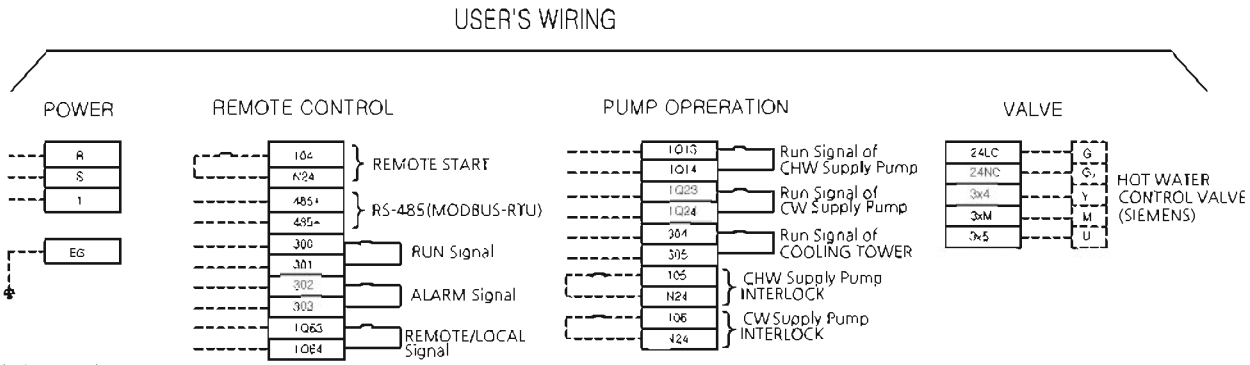

Note

---- Is field wiring at the site after completion of chiller installation

[Thermal Insulation]

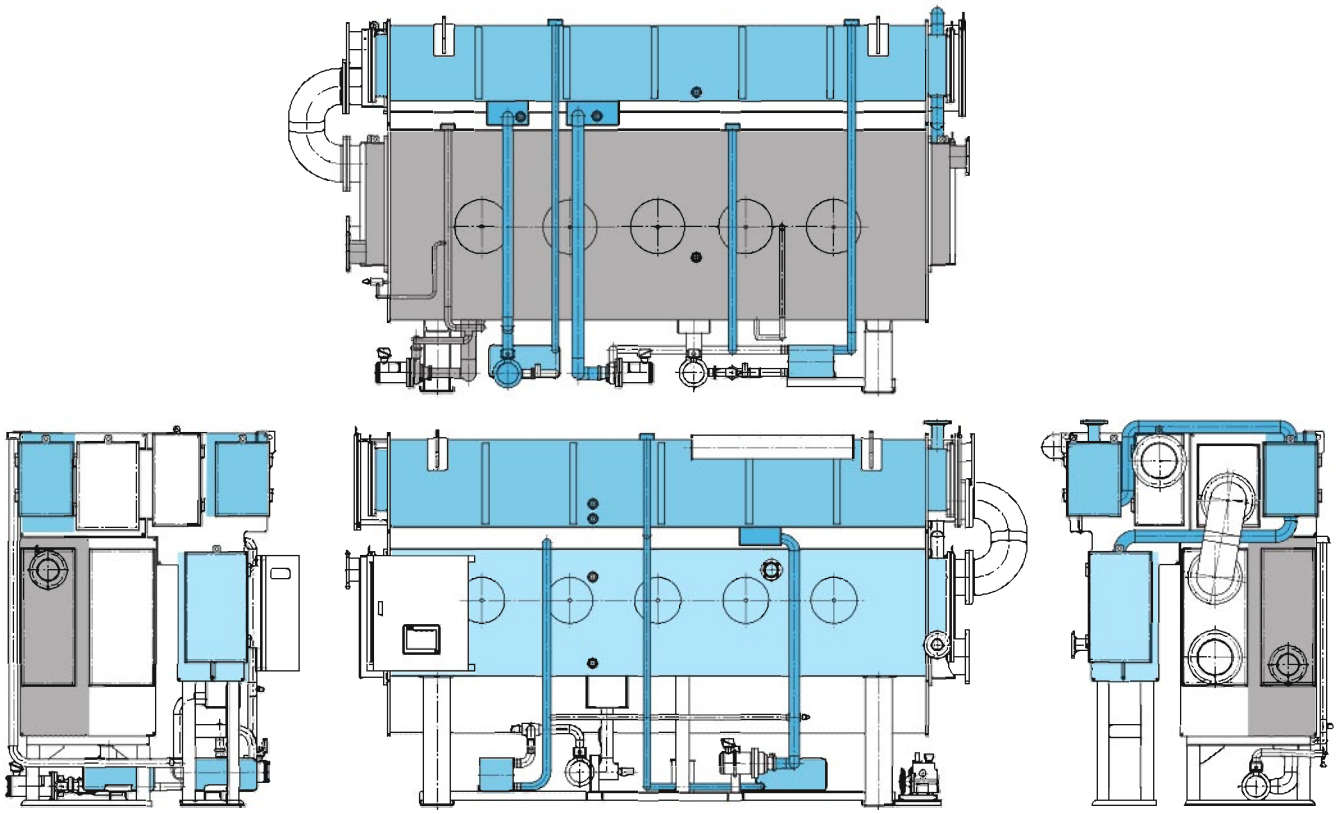

	Mark	Material	Thickness	Finishing Material	Note
Hot Surface		Glass Wool	25mm	Galvanized Plate 0.6t	-
		Glass Wool	50mm	Galvanized Plate 0.6t	G1 side
		Foam Rubber	19mm	-	Pipe
Cold Surface		Polyethylene	20mm	-	-

■ Cold Surface and Hot Surface

SAC-DL	65T,80T	100T,120T	150T,180T	210T,240T	270T,300T	340T,370T	420T	470T	520T
Cold Surface(㎡)	7	8	10	11	13	14	16	17	19
Hot Surface(㎡)	12	14	17	19	22	25	28	31	34
SAC-DL	570T	640T	710T	800T	850T	920T	1000T	1100T	1200T
Cold Surface(㎡)	19	20	21	21	23	24	26	28	29
Hot Surface(㎡)	34	37	39	40	42	44	47	52	54

NOTE

1. Use only noncombustible material.
2. Valve control part, sight glass, thermometer gauge, thermowell, pressure gauge and pump motors are not insulated.
3. For insulation area for each model, please refer to the picture below.
4. Part that requires a insulation, please refer to the picture above.
5. The water box sections should be worked to be disassembled for the repair.
6. Please install an insulating materials by using adhesive, mending and etc.
7. Total insulation area includes piping.